Procurement Executive - Ministry of Defence

AWRE, Aldermaston

AWRE REPORT No. 036/76

Seismometer Array Station Processors

F A Key
T G Lea
A Douglas

ISBN 0 85518107 9

CONTENTS

SUMMARY

A description is given of the design, construction and initial testing of two types of Seismometer Array Station Processor (SASP), one to work with data stored on magnetic tape in analogue form, the other with data in digital form. The purpose of a SASP is to detect the short period P waves recorded by a UK-type array of 20 seismometers and to edit these on to a digital library tape or disc. The edited data are then processed to obtain a rough location for the source and to produce seismograms (after optimum processing) for analysis by a seismologist. SASPs are an important component in the scheme for monitoring underground explosions advocated by the UK in the Confernece of the Committee on Disarmament.

SASPs are intended to operate off-line and process 24 hours of array recording in an hour or two. Shift work is then unnecessary and the remaining time in the working day can be used for analysing the detected signals.

The original plan was to develop a SASP to work, at 16 times real time, on array data from UK-type arrays which currently record data in analogue form on magnetic tape and a SASP of this type was developed. Its operation was not very satisfactory because numerous spurious signals were generated in the analogue replay system. Although this problem is not insurmountable, it was decided to re-develop the SASP to work from digital input; this also has the advantage that it allows the full dynamic range of the recording system to be exploited. Tests show that with digital input a SASP can operate at 30 times real time using a linear detection process and at 20 times real time using the log detector of Weichert. Although the log detector is slower, it has the advantage over the linear detector that signals with lower signal-to-noise ratio can be detected and spurious large amplitudes are less likely to produce a detection.

It is recommended, therefore, that where possible array data should be recorded in digital form for input to a SASP and that the log detector of Weichert be used. Trial runs show that a SASP is capable of detecting signals down to signal-to-noise ratios of about two with very few false detections, and at mid-continental array sites it should be capable of detecting most, if not all, the signals with magnitude above m_b 4.5; the UK argues that, given a suitable network, it is realistic to hope that sources of this magnitude and above can be detected and identified by seismological means alone.

1. INTRODUCTION

In September 1965 the UK tabled a working paper at the Eighteen Nation Disarmament Conference* [1] which outlines a scheme for monitoring underground explosions using a network of 20 to 25 seismometer arrays; the network is described in more detail in reference [2] of 28 July 1970. Both the papers refer to the need for

*The Eighteen Nation Disarmament Conference later became the Conference of the Committee on Disarmament (CCD).

processing the recorded data to make the best use of the arrays and an outline of the processing system was presented on 22 August 1972 [3]. The main component of this processing system is a SASP which would operate at an array station, detect the short period (SP, with frequencies around 1 Hz) P waves recorded by the stations and edit these signals on to a digital library tape or disc. These edited data would then be processed by the SASP to obtain a rough location for the source and to produce seismograms (after optimum processing) for analysis by a seismologist.

2. BACKGROUND

For the UK Research and Development programme on the detection and identification of earthquakes and explosions, the processing and analysis of the data have always been done at a data centre situated at Blacknest. If arrays are to be used to monitor a comprehensive test ban treaty, this approach would mean that large volumes of data would have to be transmitted rapidly to a data centre (which would be costly however it was done) and a data centre would then be faced with the enormous task of routine processing before any analysis of the recorded signals could begin. The UK, therefore, advocates that initial processing and analysis of the data should be done at the recording station. Only the basic parameters of the recorded signals normally sufficient to identify earthquakes would be transmitted to the data centre. The waveforms recorded from seismic sources that might be explosions could be transmitted to the data centre if required. In this way the volume of data that would have to be transmitted from the station to the data centre would be greatly reduced. The job of the data centre would then be to collate the information from all the stations of the network to estimate hypo-centres, average magnitudes and so on to enable a diagnosis to be made - earthquake or explosion?

At an array site the analyst will have to deal with about 5000 seismic signals each year but these signals will occupy only about 400 hours out of the total 8760 hours in a year. The basic purpose of SASP is to eliminate about 8000 hours of recorded noise and present to the analyst only the recordings of possible signals; in this way the analyst can use his time in analysing signals rather than spend it wading through many hours of noise.

Array processors are designed to detect signals with amplitudes that exceed the average noise level by some specified factor. If this factor is large, virtually all detections will be true signals; if the factor is small, detections will be made not only on true signals but on the numerous apparent signals which result simply from random increases in the noise background; such detections on noise fluctuations are usually called false alarms or false detections.

One of the requirements of SASP is that it should be able to detect all signals with amplitudes about 6 times the root mean square noise amplitude without the number of false triggers exceeding the number

of true signals detected. For this threshold level the maximum noise amplitude will usually be about half the signal amplitude and this seems a practical target for if the signal-to-noise ratio were to be much less than this, the analysis of the signal would be difficult. For arrays sited at mid-continental sites, where the background noise is low, it is hoped that the detection threshold of a SASP will be lower than a body wave magnitude m_b of 4.5. The UK advocates an m_b of 4.5 as a realistic level above which most, if not all, earthquakes and explosions can be identified.

The problem of the rapid processing of seismic array data has been investigated since arrays were first installed. There are basically two approaches to array processing: one is to process on-line, that is, the array data are fed straight into the processor so that signals are detected as they are received; the second is to record the array data on magnetic tape for some period (say 24 hours) for processing later, off-line.

The United Kingdom Atomic Energy Authority (UKAEA) built one of the first array processors, SADA (Seismic Array Data Analyser) in the early 1960's; this was designed to operate off-line. The central processor for this machine was constructed especially for the purpose and had the disadvantage that it was inflexible and relatively slow. During the 1960's computer technology developed rapidly so that small reliable digital computers of high speed became widely available. The obvious approach was to build a processor around one of these computers. This was done in Canada [4] where a processor for use off-line was built to process data from the Yellowknife (Canada) array. With this machine, array data was initially processed at twice the recording speed, but later the processing speed was increased to four times the recording speed. More recently the Canadians have switched to on-line processing using a machine called CANSAM (Canadian Seismic Array Monitor [5]). In the USA similar work has been done on on-line and off-line processing of array data.

The array data that was the input to the machines operated off-line by the UKAEA and by the Canadians was in analogue form. For processing the data was converted to digital form and after processing converted back to analogue form for display. The design and planning of SASP was based on the assumption that this machine would also have, as input, data in analogue form on magnetic tape, and the first SASP built operated with this type of data.

Various problems were encountered in the building and running of this SASP, mainly arising from the analogue input. For this and other reasons it was decided to install digital recording at the arrays where a SASP was designed to operate so that a digital input to the SASP could be provided. A second version of the SASP was, therefore, developed to work with data recorded in digital form on magnetic tape. Where it is necessary to distinguish in what follows between a SASP that uses analogue input and one that uses digital input, the terms analogue SASP and digital SASP respectively are used.

This report describes the design and development of both the analogue and digital SASPs.

3. SEISMOMETER ARRAYS AND ARRAY PROCESSING

A considerable amount of research has been done on the design of seismometer arrays over the past 15 years. The UK standardised on a particular design of short period array early in this work and has kept to this design ever since (arrays of this design are usually described as UK-type). Examples of such arrays are those at Gauribidanur, India (GBA); Warramunga, Australia (WRA); and Yellowknife, Canada (YKA). Each array consists of two lines (arms) at right-angles (or close to it) with ten seismometers in each arm, the seismometer spacing being 2.5 km (figure 1); this spacing was chosen so that the short period noise recorded by adjacent seismometers in the array is uncorrelated. The overall length of each arm was chosen to be about one (horizontal) wavelength for P signals at 30 to 90° from the epicentre; this is the best distance range in which to record P signals for the identification of the source. Since they commenced operation, the output of the UK-type arrays (19 or 20 channels of seismic data with time and error correction) have been recorded on magnetic tape in analogue form. When a digital SASP is installed at an array, digital recording will also be installed to provide the input to the SASP.

The usual processing method used for UK-type arrays is to sum the individual seismometer channels after inserting delays to correct for the differences in the arrival time of a signal at each seismometer. For any given azimuth, the apparent surface speed of the signal across the array depends on the angle of incidence at the array; as the angle of incidence tends to zero, the speed tends to infinity; as the angle of incidence tends to 90°, the speed tends to the wave speed in the material underlying the array. For P waves in the range 30 to 90°, the angle of incidence decreases with increasing distance so that the apparent speed increases with distance. For random noise the delay and sum process gives a signal-to-noise improvement on average of $n^{\frac{1}{2}}$, where n is the number of seismometers in the array.

Arrays of the type described above are used to detect the short period P waves from earthquakes and explosions; these are the most widely recorded signals generated by explosions and earthquakes. From the arrival times of these waves at a number of different stations, the best estimate of epicentre and origin time of the seismic source can be obtained. In order to identify seismic sources as either earthquakes or explosions, seismic signals are required recorded in other bands as well as the SP band, particularly the long period (LP) band (centred around 0.05 Hz) and a broad band from 0.1 - 10 Hz. Originally, it was intended that an LP array would be established at each SP array but this now seems to be unnecessary. However, it is not important to discuss this aspect of the problem in this report, which is concerned only with the details of detecting signals and producing delay and sum records.

3.1 Beam forming

The main operation carried out by a SASP is delay and sum processing. The output from this process for a given velocity is usually

called the beam (by analogy with similar processes in the propagation and reception of radio waves) and the process is usually called beam forming or beam steering. If the velocity of the signal is known, then it is only necessary to form the beam for that velocity. In a SASP, which is dealing with signals of unknown velocity, a number of beams are formed to cover the possible range of velocities; from these beams the best beam (the one formed for the velocity closest to the signal velocity) is selected.

How beam forming is carried out by a SASP is illustrated in figure 2(a). This shows three channels of digitised data, sampled at intervals, δt, in the computer store; these channels are assumed to come from three seismometers in line and equally spaced with a separation δd between each seismometer. Delay and sum processing is taking place at a time T. Summing samples across channels along line AB produces the beam for zero delay; waves travelling at infinite velocity sum in phase. Summing along line CD gives a time shift of δt to channel 1 and $-\delta t$ to channel 3 relative to channel 2; waves travelling at an apparent velocity $\delta d/\delta t$ along the array thus sum in phase. Similarly, summing along line EF applies shifts of $2\delta t$ to channel 1 and $-2\delta t$ to channel 3 (relative to channel 2); waves with apparent velocity $\delta d/2\delta t$ now sum in phase. This is the basic procedure followed in a SASP so that beams are formed for apparent velocities ∞, $\pm\ \delta d/\delta t$ $\pm\ \delta d/2\delta t$, $\pm\ \delta d/3\delta t$ .... at each step. Note that there are advantages in describing the beams in terms of inverse velocity or slowness; in this way there is a constant separation in slowness between the beams.

Several different ways have been devised of programming the basic beam-forming process outlined above. One way is to use a circular or ring buffer where the data appear to be stored in a continuous loop; this is shown diagrammatically in figure 2(b). Beam forming takes place within one section of the data in this ring buffer and, when all the beams have been formed at this step, the process moves on one step (clockwise in the diagram) around the buffer. New data are read in behind the beam-forming section to replace the oldest data. Alternatively, the double-buffer technique can be used (figure 3). Here two adjacent identical buffers are used, each buffer being just large enough to contain a sufficient length of data for all required beams to be formed from one time step. New data are added to both buffers at each step. At the beginning of the sequence, the zone of beam forming is confined to one buffer; as the process proceeds, the zone gradually overlaps into the second buffer. When the zone lies wholly in the second buffer, the process returns to the first buffer, which now contains the new data required to continue the beam forming.

3.2 The array response in the wave number space

Suppose that a series of beams are formed for a section of data that contains a signal, then the beam with slowness that is closest to the slowness of the observed signal will have maximum signal-to-noise improvement and maximum signal amplitude. For beams with other values of slowness, the signal should be suppressed relative to the best beam. The amount of suppression depends on the frequency, f, of the signal as well as the slowness, s, and is usually described in terms of wave number, $k = fs$.

Figure 4(a) shows the wave number response for an array of ten seismometers equally spaced in a line of overall length 25 km for summing without delays, that is the beam response for zero slowness. At zero slowness the response is unity and the signal is passed unattenuated. At $k = 0.04$ cycles km^{-1} the response is zero so the signal is apparently completely suppressed. The region of the response between $\pm$ 0.04 cycles km^{-1} is usually referred to as the main lobe. Figure 4(b) shows the response for the beam centred at $k = 0.04$ cycles km^{-1}. Note that if these two beams are formed, then the response is greater than about 0.6 on at least one beam for all signals with k between 0 and 0.04 cycles km^{-1}. The procedure used in a SASP (as in most other array processors) is to choose a beam spacing δk so that for any signal the array response on at least one beam is larger than some specified value close to unity, for example, 0.7 (3 db).

4. THE DESIGN AND DEVELOPMENT OF THE ANALOGUE SASP

The obvious way to operate a SASP is to feed in the seismic data as they are received and detect and edit on-line; this is real time processing. However, the experience of others working on processing problems, and similar studies at Blacknest, show that the speed of the modern small digital computer is such that it should be possible to handle all the data recorded by an array over, say, 24 hours in $1\frac{1}{2}$ to 3 hours; that is a speed-up factor of 8 to 16 times. It was, thus, decided that best use of the processor could be made by recording the output of the array on (analogue) magnetic tape for 24 hours and then processing these data rapidly on the following day in a much shorter time than the recording time. The advantages of this are:-

(a) The processor is freed after a few hours of routine processing for any other more elaborate processing that may be required.

(b) The number of people required to operate the system is reduced; all processing can be completed in a normal 8 hour day so cutting out shift working.

(c) If the processor breaks down, recording would not be lost and it would be possible, provided that the processor was repaired in a day or two, to catch up with the back-log.

The only disadvantage is that data would only be available after a 24 hour delay but this delay is acceptable.

4.1 The detection processor

The proposed detection and editing scheme for the analogue SASP requires two copies of the analogue data to be fed into the processor. This is necessary because the detection process works best if the analogue data are tightly filtered in the 1 to 2 Hz band, whereas the analysis of the seismic data is best carried out on the unfiltered data, so two data streams, one filtered and one unfiltered, are required.

The basic detection and editing scheme proposed for the analogue SASP is as follows. The data from the analogue tape is duplicated, one copy (data stream S1) is passed through a bank of analogue filters with pass bands 1 to 2 Hz, then into the analogue to digital convertors (ADCs), and finally to the central (digital) computer where the detection process is carried out.

It was planned that the second copy of the data (data stream S2) unfiltered would be written continuously on to an analogue tape loop. The analogue data would then be read off this loop by a second set of heads to introduce a 30 s delay into this data stream relative to S1. When a possible signal is detected using stream S1, the unfiltered delayed stream S2 would be edited into the digital library. The 30 s delay inserted into stream S2 ensures that the signal is written into the library with 30 s of noise ahead of the signal; this is required because the analyst needs to be able to see the character of the noise preceding the signal.

Most detection methods work by sensing changes in the short-term average of a beam compared to the long-term average. One of the best detectors of this type operates as follows. Beams are formed for each line of the array separately and from these all the products of pairs of beams are formed one from each line. These products are then smoothed with two different time constants, one a long time constant of say 30 s, the other a short time constant of say 2 s. The long- and short-term averages are then compared; if the short-term average exceeds the long-term average by some specified amount, this is taken to indicate a detection. The smoothed product that reaches the largest amplitude is the best beam.

The disadvantage with this detector is that many multiplications have to be performed and this slows down the process. In order to avoid these multiplications the detection processing proposed was to form beams for each line separately, rectify and smooth them to obtain long-term and short-term averages; this method of detection was suggested by Weichert. A signal is then assumed to have been detected if the short-term average exceeds the long-term average for at least one beam on each line. On detection the unfiltered channels are written into the library, together with a note for each line of the beams that had the largest amplitudes. From these the velocity or the slowness and azimuth of the signal can be computed (appendix B).

If the width of the main lobe of the wave number response for a line array is defined as the distance between the points where the response is 0.7 of its peak (the 3 db points), then, for a line array of 10 seismometers spaced at intervals of 2.5 km, this width is about 0.036 cycles km^{-1} (figure 4). For a seismometer spacing of 2.5 km, the spacing between beams in slowness is (from section 3.1) $\delta t/2.5$ where δt is the sampling interval of the data. Now detection processing is to be carried out on data filtered in the 1 to 2 Hz band. Assuming that the predominant frequency of most signals will be around 1.5 Hz, the beam spacing will be 0.036 cycles km^{-1} if δt is about 0.06 s; the round figure of 0.05 s (a sampling rate of 20 samples s^{-1}) was, therefore, chosen as the sampling interval which gives beam spacing of 0.03 cycles km^{-1} at 1.5 Hz.

For arrays of the UK-type, which consist of two lines, beams are formed for each line separately and a detection is defined by the two best beams, one from each line; these beams specify signals in the k-plane as lying within the parallelogram formed by the intersection of the 3 db contours of the two beams. If 11 beams are formed for each line for the range of slowness -0.1 to 0.1 s km^{-1} (in velocity -10 to +10 km s^{-1} through infinity) these define 121 combined beams spaced (for 1.5 Hz signals) at intervals of 0.03 cycles km^{-1}; the centres of these beams for each of the arrays GBA, WRA and YKA are shown in figure 5. Figure 5 also shows the earth's surface projected into the k-plane for each of the arrays using the slowness-distance relationship for P waves. From figure 5 it is clear that 121 beams are sufficient to cover the whole earth down to distances of less than 30° from the array. Tables listing the positions of the centres of the 121 beams for each array are given in appendix C.

Note that by summing pairs of beams, one from each line, the signal-to-noise ratio could be improved by about $\sqrt{2}$ for the best combined beam over the best beams for each line separately. By detecting on the total sum, then signals with smaller signal-to-noise ratio than will be detected by treating the two lines separately, could probably be detected. However, the extra signals detected in this way will be of such low signal-to-noise ratio as to be impossible to analyse. The advantage of treating each line separately is that it is hoped this will reduce the number of false alarms. In any case, the original recordings are retained for a time sufficient to allow later examination on the basis of reports by other stations.

4.2 The signal processor

Once the possible signals on a given tape have been detected and written into the digital library, signal processing can be carried out. This is a relatively easy task compared to the detection process. For signal processing the digital data for each possible signal is read back into store and the best beam for each arm is then formed. From these two beams three channels of output are generated. These three channels, together with time, are then played out. The proposed three channels are:-

(a) Total sum.

(b) Products of the separate beams for each arm; for the detected signals, this product should be all positive if the correct beam has been chosen and so this provides a check on the beam selection.

(c) Smoothed form of channel (b); this is used to make estimates of the complexity of signals.

4.3 The choice of computer

The maximum dynamic range of the analogue input tape system in the 1 to 2 Hz range is 54 db. This requires nine binary bits for full representation; a computer with a binary sample length of ten bits plus

sign would be adequate. Summing twenty coherent maximum signals increases the number of bits to fifteen (including sign); this indicates that a sixteen bit machine would be adequate for a SASP.

The detection process must be carried out very quickly so a computer with a fast cycle time and memory is essential. A machine with a cycle time longer than about 1.5 μs would be too slow. Also the SASP requires input and output of large data strings so this feature of the chosen computer is particularly important.

From these considerations and those of cost the PDP11 built by the Digital Equipment Corporation (DEC) was chosen as the computer around which the SASP was built.

4.4 The prototype

4.4.1 Hardware

The block layout of the hardware is shown in figure 6. The plan to include an analogue tape loop in the data stream S2, as described in section 4.1, was abandoned soon after the SASP was commissioned; this was necessary because the high tape speed at which the loop had to run meant that the tape wore out rapidly and this wear, combined with the inevitable tape splice, added further noise to the data. After removal of the loop deck from the system, the delay between streams S1 and S2 had to be obtained by using a second set of read heads on the replay deck. This reduced the effective delay from 30 to 16 s (real time) which, however, just enables the basic beam forming and detection processing to be carried out.

The data stream S1 on which detections are to be made is fed to the filter bank and then to channels 1 - 21 of the ADC unit. The unfiltered delayed signals (stream S2) goes to channels 22 - 42.

The analogue filter bank consists of four-pole Butterworth filters with a pass band of 1 to 2 Hz (at the 3 db points) and a roll-off of 24 db/octave.

The analogue-to-digital conversion unit consists of 42 channels with separate sample and hold amplifiers and 12 bit ADCs in each channel. This method was chosen in preference to an analogue multiplexing system because it enables simultaneous sampling of all channels; it is also more dependable. Each channel can be non-destructively read and individually addressed. Initially, the ADCs in this unit tended to fail when the unit was operated with its own internal power supply. The problem was referred to the manufacturer and has now been cured, but in the early stages of development a large proportion of the ADCs failed and replacements took some time to obtain.

The digital processor consists of a PDP11/40 16 bit word central processor with 32K bytes of core and the following peripherals:-

(a) High speed paper tape read/punch.

(b) 800 bpi 9-track magnetic tape drive.

(c) Decwriter terminal.

(d) 2.4 Megabyte moving head cartridge disc drive.

Four channels of output can be played out on an ink-jet (Mingograph) recorder via an analogue-to-digital converter and interface unit.

4.4.2 Software

The software used to develop the program is the Digital DOS 11 package which includes file management and editing features, debug routine and compilers for the PAL assembler and FORTRAN languages, and a single task monitor. Initially, it was intended to use a high level language for the detection program as a basis from which to start optimising, but this was soon abandoned because detectors using the DOS FORTRAN turned out to be about 20 times slower than required; assembler language was therefore used exclusively.

Several versions of the program have been written; in all these the sampling rate is controlled by the programmable clock, but ideally this sampling control would be by the ADC unit synchronised with the analogue clock pulses off the primary tape.

The first version of the program developed and designed to operate at 16 times real time proceeds as follows. The filtered input data are read continuously into a circular data buffer and the required samples are then selected from this buffer to form each of the 22 beams (11 for each line) at one time, as described in section 3.1; each sum is then rectified. At any time for a given beam the previous 40 rectified sums are held in a ring buffer. For each beam the average of these 40 sums (which is the short-term average) is compared to the average of the beam over a previous 150 s (3000 sample) interval (the long-term average). If the short-term average exceeds the long-term average by some specified factor (usually four) for at least one beam from each line, this is counted as a detection. On confirmation of a detection the unfiltered and delayed data are sampled and buffered into a dual magnetic tape buffer prior to being written on to the magnetic tape.

The long-term average is only recalculated at 1000 sample (50 s) intervals. The rectified sum for any one beam is summed for a thousand samples and the sum added to the sums for each of the two preceding 1000 sample sections, the sums for these previous intervals having been retained in store. The large sums that are accumulated require double word precision in this calculation.

The data written on to tape for each detection cover the time interval from about 16 s ahead of the time of detection to 2 min after detection, the 16 s ahead of the detection being the maximum delay available in the unfiltered delayed stream S2 and is about the

minimum time ahead of the detection that can be tolerated. In order to define the best beam, the beams with the largest amplitude on each of the two lines are required and, ideally, this would be noted and written on to tape at the same time as the detection is made. However, it has been found that, if the beams with the largest values in the first 50 samples after detection are used, this gives a better estimate of the best beam. To await 50 samples after detection to pick the best beam before writing the delayed data on to tape would mean that the length of the noise ahead of the detection point, which is already small, is further reduced. (In the worst case, allowing for all delays included by the detection process, the length of noise ahead of the detection point could then be as small as 5 s.)

In order to avoid cutting down on the noise in advance of the detector, and yet obtain the best estimate of the beam in the 50 samples after detection, the data are first written on to tape immediately following detection. These data are then read back from tape and passed through the beam-forming process again, this time picking the beam for each line that attains the largest amplitude in the first 50 samples after detection.

When the detection processing has been completed, the SASP is switched to signal processing. The data are read back for each detection in turn, the best beam for each line formed and written on to disc, together with the time channel. These best beams for each line are then read back into the store and the best total beam and cross products of the line beams formed. The total beam and the cross product are then written back on to disc. Finally, the best beam, the cross product and the cross product smoothed by a leaky window filter, together with a time channel, is played out on the ink-jet recorder. This output is preceded on the time channel by a pulse presentation identifying the best beam.

On completion of this pass, the operator can interact with the SASP to choose alternative beams to look for signals that occurred later in the data sequence of the current file.

The detection process, as outlined above, is capable of operating at 16 times real time as required. However, the number of false alarms proved to be large. Many of these false alarms seemed to arise from spurious signals generated in the analogue replay system and to be in some way connected with the fact that the data were being played back at very high speed compared to the recording speed. In order to avoid some of the false alarms, it was therefore decided to drop the operating speed down to 8 times real time; this, it was hoped, would cut down the number of spurious signals generated but would also allow more time to employ more elaborate detection processors. The program was, thus, changed to run at 8 times real time. In addition, following a suggestion of Dr S Crampin, beam formation is now carried out only at every fourth time step, although the sampling rate remains the same so that the required distribution of beams can be obtained. With the time now available because of these modifications to the program, each channel is filtered to try and suppress any spurious signals before the data go to the detection processor.

To remove glitches (high frequency excursions which are not derived from the data) from digitised data is relatively easy if the pulse width is about the same as the sampling interval. Unfortunately, in the analogue SASP detections are made on data that have passed through a 1 to 2 Hz band pass filter before sampling. This filter transforms the pulses to the characteristic impulse response which "rings" for several cycles. This makes the problem of glitch removal more difficult.

The method chosen is the limitation of the second difference of the data. This weights the effect on the high frequencies and gives a symmetrical response (as opposed to that given by limiting the first difference). A small residual can build up due to rounding errors or any asymmetry in the velocity profile, so a leaky integrator with a large time constant had to be added after the limiter to correct for long-term drift.

With these modifications to the detection processor, the SASP operated at 8 times real time.

5. THE DIGITAL SASP

An analogue SASP can be constructed to operate at 8 times real time and, with experience, it looks as though the software could be further improved so that a return of 16 times real time would be possible. False alarms, however, remain a problem, particularly those generated by rapid playback on the analogue equipment. This problem could be avoided by recording the initial array data in digital form and having a wholly digital system.

Over the past few years it has also become clear that digital recording with its high dynamic range has other important advantages. The principal advantage is that from such recording a much broader band signal can be obtained from the conventional SP recording than has previously been thought possible. Work is now going ahead to develop such digital recording systems and a digital SASP has been developed to process data stored on magnetic tape in digital form. In order to test the digital SASP, digital tapes with the format to be used at the arrays have been made by digitising analogue tapes using the hardware of the analogue SASP.

The programming of a digital SASP is in some ways easier than the analogue SASP because the digital input is under program control, the input tape can be stopped, started and backspaced, and data can be read from the tape as needed. In the analogue SASP the analogue playback proceeds at a fixed rate once detection processing commences and data are continuously being presented to the processor and must be accepted; there is no facility for varying the rate of input.

A block diagram of the layout of the digital SASP is shown in figure 7; the central processor is identical to that of the analogue SASP. The operation of the digital SASP has two main parts:-

(a) The processing stage in which data are read in from magnetic tape, signals detected and transferred to a floppy disc.

(b) The replay stage where the signals on disc are read back into the computer and after further processing displayed via a 4-channel DAC on a 4-channel pen recorder.

Statistics on the processing operation and on the signals detected are printed out on the teletype. When replay is complete, the data from the floppy disc are transferred to a library tape mounted on the tape unit for long-term storage. Note that the magnetic tape unit here records 1600 bpi compared to that used on the analogue SASP which records 800 bpi.

5.1 The processing stage

The processing can be divided into two sections: the search process and the data transfer.

5.1.1 The search process

The main steps in the search process are:-

(a) Read in the data from digital tape into the main data buffer.

(b) Read data from the main buffer, digitally filter and store in the process buffers.

(c) Carry out beam forming and detection of signals on the filtered data. When a signal is detected, the data transfer section of the processing stage takes over.

The search process is shown in a simplified block diagram in figure 8. On entering the program, all storage buffers and locations are cleared, with the exception of the long-term average (LTA) stores, which are loaded with a value in excess of the typical value. The control section handles the input and processing of the data which are held in the main data buffer of 7903 words. Data from the magnetic tape unit are loaded alternately into sections 1 (with 1A) and 2 (1A is a duplicate of the first 15 samples in 1 to provide an overlap of data for digital filtering). Each tape record is 4012 bytes in length (100 samples, 20 data channels and 12 bytes including time). The format includes a status bit for each data word and this is monitored and all invalid data cleared. The 20 data channels are band-pass filtered and written into two duplicate buffer sections 3 and 3A. The digital filter used is a simple 20-point filter with binary weights (figure 9). The size of the duplicate process buffers is chosen to just accommodate the maximum time spread required for beam forming (90 samples = 1800 words).

The beam forming sub-routine is the most time consuming, as it involves summing samples from each channel in each line with appropriate time offsets equivalent to slownesses from -0.10 to

± 0.10 s km^{-1} in 11 steps. The coding for this is lengthy, and as the aim is to make this process as fast as possible and so to save space, the same sub-routine is used for each line. The time reference for each line is taken as the seismometer channel nearest to the cross-over point of the two arms of the array: R1 and B1 for WRA and GBA, R8 and B6 for YKA (figure 1). The resulting time offsets between the two sets of line sums are allowed for in the detection logic. Using the sub-routine twice, the computing time for the 22 line beams is 1.2 ms. Since the beams are computed from 1 to 2 Hz band-pass filtered data, nothing is lost by forming them only every third sample, and in consequence the short-term average (STA), LTA and detection routines similarly operate every third sample.

The STA for each of the 22 beams is equal to the sum of the previous 1.5 s of rectified data so, as the beams are formed every third sample, the STA is the sum of 10 samples. The STA is thus a 1.5 s square window integration of the filtered beam amplitude. Without any attenuation or compression, the scale of the STA is the product of 10 (samples per beam), 20 (the gain of the band-pass filter) and 10 (samples in the STA), giving an effective gain of 2000 at 1.4 Hz, which means that all but the smallest signals would overload. In order to reduce this an attenuation of 512 is introduced. Although this reduces the resolution of small seismic signals to sign only, experiments on detection have shown that the performance is not significantly degraded; this avoids the use of double precision arithmetic, which takes more space and is slower than single precision.

The LTA is a 30 s exponential integrator formed by multiplying the old LTA by 0.952 and adding a new STA every 1.5 s. The integrator has an inherent gain of about 21 so that the STA is divided before being added in. This provides a convenient point for adjusting the LTA-to-STA ratio and, thus, the detection threshold.

The detection subroutine is entered after a wait of 15 s following a previous detection. This is to allow the LTA to re-settle following a detection and thus reduce the number of multiple detections on a large event. (Note that the LTA just before a detection is retained until the search recommences.) Every third sample the LTA and STA for each of the 22 beams are compared, and if the STA exceeds the LTA in any beam, a "trigger" is registered. The line in which the trigger occurred is flagged and the time logged. For the next 4 s the STA for every beam is monitored and the maximum is logged. At the end of this time the trigger flags for each line are examined and if only one line has triggered, a "false trigger" is logged and the normal search is resumed. If, however, both lines have produced a trigger within the 4 s window, a "detection" is signalled. The maximum STAs for each beam are then examined and the maximum for each line and the beam identification number is logged. These are considered to be the best beams. Control then passes to the data transfer section of the processing stage.

5.1.2 Data transfer

In the data transfer section of the program (block diagram in figure 10) the best beam information is used to re-form the line

beams; these are then written as two channels on to disc. In order to do this the tape is back-spaced to about 30 s before the trigger time and, using the RT11 monitor routines, a file is opened on the disc. The first block of data written on to disc contains data which will be useful to the analyst and in performance trials. The first four words of the block contain the time code to the nearest previous 5 s mark plus the sample count to the trigger time. The next four words contain the maximum amplitude and beam identification number of the best red and blue beams respectively. The following 22 words contain the maximum amplitudes of all the beams at the time of the detection. The next word contains a count of the number of false triggers since the last detection.

The 80th to the 160th byte of this block is a string of ASCII text which gives the specification of the various parameters in the search program which generated the detection. Each of the elements in the program (eg, the filter, the STA and the LTA) contains a short text carrying its specification. These are collected together as a single line of text so that there is a permanent record of the system parameters.

The beam forming programs for this part of the processing are written individually, one program for each of the 22 beams. All the summations are done using double word precision (32 bit resolution) and the final sum is normalised by dividing by the number of channels. The full dynamic range of the original recording is thus retained. Offsets are incorporated to refer all data to the array cross-over point, even when this occurs between elements of the array. Using the beam identification numbers, the address of the best beam entry point is selected and the two subroutines are overlaid into the main program so reducing the total memory required.

The same data storage area is used in this section as in the search process, but with different divisions so that area 1A is now a complete duplicate of the data in area 1 (ie, 100 samples) and a complete data overlap for the beam-forming programs is provided. No process buffers are required as the beams are formed directly from the recorded data, but a small buffer of 256 words (area 3) is provided for formatting the disc files.

In order to be compatible with other digital data stored at Blacknest, all words within the file are byte reversed. The block length is 203 words (5 s of data), the first three words containing the day/time data from the original recording. The file length is 24 blocks (2 min of data) and this allows 20 files to be recorded on a single floppy disc. Should more than 20 signals be detected during the processing of one tape, a message is put out requiring the operator to replace the disc with an empty one. When the computer reads an EOT (end of tape) mark the program terminates.

5.2 The replay stage

This program produces four analogue outputs, which can be displayed on an ink-jet (Mingograph) recorder, from the detection data recorded on the disc. The four output channels are as follows:-

(a) Time code.

(b) Total sum of all channels (best beam).

(c) The best beam filtered in the 1 to 2 Hz band (using the same filter as in the process stage) and time shifted to line up with channel (b).

(d) Product of the filtered line beams.

Channel (d) is useful in assessing the validity of a detection; if there is a genuine signal and the best beam has been picked, then this product channel will be all positive.

When each file is selected for replay, the full signal and system data are listed on the terminal. The analyst is thus able to interpolate between beams, if necessary, by comparing the amplitudes of the adjacent beams.

The program also includes an option to obtain a summary of the detections in any run, this summary lists the file number, the amplitude and identification number of the best line beams, the number of false triggers since the last detection and the onset time to the nearest second.

When all replays have been completed, the files are transferred from disc to a library tape for long-term storage.

5.3 The log detector

Beam forming for detection as described above is a linear process*; the beams are simply linear sums of the input data. In recent years however, various non-linear types of detectors have been advocated in an attempt to reduce the number of "false alarms" [6-7]. Experiments have been made with the digital SASP with one of these non-linear detectors, the log (logarithmic) detector of Weichert [7], to assess its advantages over the linear detectors. Weichert [7] suggests that beam forming for detection be carried out on an approximation to the log (to the base 2) of the filtered input data; being to a binary base, the process of taking logs can be made rapid. Each input value is reduced to 8 bits, a 4 bit exponent and a 4 bit "mantissa". For all absolute values of less than unity, the log is set to zero. In taking the logarithm the sign of the input value is ignored, the sign being assigned to the logarithm itself. The result of the log conversion is to make the range of amplitude of the input data more uniform. Signals are detected now more by their coherency compared to the noise than by an increase in amplitude. Weichert [7] has shown that the two main advantages of using the log detector compared to the linear detector are: (a) a lower detection threshold is possible, and (b) spurious large amplitude signals are less likely to produce a detection. As each input value is reduced on conversion to logs to an 8 bit word, the need for scaling the STA discussed in section 5.1 is removed.

---

*For small signals this is not strictly true because they are represented by sign only after scaling to prevent the overloading of large signals.

Using the log detector on the SASP and forming a beam every third sample gives a speed up factor of 20 times real time compared to the 30 times real time possible with the linear detector.

5.4 Performance

In the testing and commissioning stages, only two short sections of data have been analysed, purely as a check on performance. Before final decisions are made on the threshold levels, a large amount of data will have to be processed, but sufficient has been done to show that the log detector is far superior to the linear detector. The main experiments have been performed on a section of YKA data from the period of the International Seismic Month (ISM: February - March 1972). Seismic data recorded during the ISM have been studied in detail elsewhere [8], to produce as complete a list as possible of earthquakes and explosions that occurred during the period. Comparison of the SASP detections with the ISM list [9] is then the best way to assess the performance of the SASP. A similar study has been made by Weichert using the CANSAM, so the SASP and CANSAM results can be compared.

From the ISM a 6-hour section (1972, February 24, 10:00 - 16:30) was chosen because the CANSAM results showed this to be a reasonably active period. The threshold level was varied by altering the division in the LTA formation process and is expressed as a ratio of LTA-to-STA. The number of false triggers (indicated in the print-out for each file) and the number of false detections assessed from the records as being due to non-seismic signals (invariably tape drop-outs), were logged for each condition. The results are given in table 1, together with the CANSAM results for comparison. The superiority of the log detector is obvious. Even when the threshold of the linear detector is lowered, and the false trigger count is pushed up to 209, only one additional genuine detection is made which is still about a third of the best log detector. The lowest threshold log detector found four signals not logged by the CANSAM whereas the CANSAM logged 11 signals not seen by the SASP. Note that a true comparison of the performance of the SASP and the CANSAM is not possible because the number of false detections that occurred on the CANSAM is not reported.

One feature of the log detector revealed by these data is the much sharper discrimination between the beams. Figure 11 illustrates this by showing a comparison between the normalised amplitudes of the 22 beams for the signal at 12 h 11 min 33.2 s for both the log and linear detectors. The processed signals for this earthquake which has an ISM magnitude of m_b 3.88 are illustrated in figure 12(a). Figure 12(b) shows the outputs for the signals with arrival time 11 h 27 min 43 s which was not detected by the CANSAM.

Because of the greater resolution of the log detector, it is easier to interpolate between beams to estimate the velocity of the signal. Figure 12(c) shows a signal that does not completely correlate on the product output. The normalised beam amplitudes (figure 13) show that, although the beams 8 and 5 picked by the processor are correct, a much better estimate obtained by interpolating is, say, 7.6 and 4.7. Thus, a better velocity could be determined than that obtained from the best beam. Examples of the SASP output from simulated WRA digital data are shown in figure 14.

6. CONCLUSIONS AND RECOMMENDATIONS

The principal conclusion of this report is that it is possible to detect and process the signals recorded by a 20 element UK-type array at 16 times real time or faster. If analogue input is used, there are some difficulties with false detections, principally arising from noise generated in the analogue play-back system; in addition, it is difficult to obtain a sufficient delay between the main (unfiltered) data stream and the detection stream to allow signals to be edited on to a disc with a sufficient length of noise preceding the signal. None of these difficulties is insurmountable, but it is recommended that where possible the array data should be recorded in digital form for input to a digital SASP; the digital SASP has much more flexibility than the analogue version and with a linear detection processor can be operated up to 30 times real time. In order to reduce false detections, however, it is recommended that the log detector of Weichert [7] be used. Though the processing speed is thereby reduced to 20 times real time, it is more than adequate.

The performance of the detection processor in the SASP has yet to be assessed but preliminary studies show that using the log detector, signals with signal/noise ratio of around two (after band pass filtering) can be detected as required (see figure 12(b)) with no false detections. The largest sample of data studied so far is from Yellowknife and was recorded during the International Seismic Month (ISM). During this period, the SASP was able to detect most signals from seismic disturbances known to have occurred with amplitudes of 0.25 nm or greater (and some with smaller amplitudes) which is equivalent to m_b 3.5, an order of magnitude below the threshold of m_b 4.5 set as the limit of detection that SASP must achieve at a quiet mid-continental site. The period of the ISM was February/March, a time of year when noise levels at Yellowknife are very low. In the summer months the noise levels could be an order of magnitude greater. Consequently the results achieved so far with SASP may represent the best that can be achieved and the average detection threshold may be nearer m_b 4.5 than m_b 3.5.

7. ACKNOWLEDGMENTS

We have benefited greatly from discussions with many people on the problems encountered in the development of SASP. In particular, we would like to thank Drs D H Weichert and K Muirhead who helped to guide our thoughts on the planning of SASP and Dr S Crampin for suggestions on dealing with the time constraint.

We also thank Messrs B D Hopkins and B K Holdsworth for their assistance in the construction of the analogue SASP and Mr G D L Matthews for help in the preparation of appendix C.

REFERENCES

1. Notes on United Kingdom Research of Techniques for Distinguishing between Earthquakes and Underground Explosions. ENDC/155

2. Working Paper on Verification of a Comprehensive Test Ban Treaty. CCD/296

3. Working Paper on Seismic Yields of Underground Explosions - Estimating Yields of Underground Explosions from Amplitudes of Seismic Signals. CCD/386

4. D H Weichert, E B Manchee and K Whitham: "Digital Experiments at Twice Real-Time Speed on the Capabilities of the Yellowknife Seismic Array". Geophys J Roy Astr Soc, 13, 277-295 (1967)

5. D H Weichert and M Henger: "Design and 1974 Performance of the On-Line Canadian Seismic Array Monitor Processing System (CANSAM)". (1975)

6. K J Muirhead: "Eliminating False Alarms when Detecting Seismic Events Automatically". Nature, 217, 533-534 (1968)

7. D H Weichert: "Logarithmic Beam Forming for Suppression of False Alarms in Seismic Detection". Geophys Res Lett, 2, (4) (1975)

8. D Davies and R T Lacoss: "First Results from the International Seismic Month". Technical Note 1973-32, Lincoln Laboratory, MIT (1973)

9. R T Lacoss, R E Needham and B R Julian: "International Seismic Month Event List". Technical Note 1974-14, Lincoln Laboratory, MIT (1974)

TABLE 1

Comparisons of the Performance of the Digital SASP with Log and Linear Detectors, with CANSAM for 24 February 1972 and Yellowknife Data

LTA/STA	SASP					CANSAM	
	Log Detector			Linear Detector		Pass No.	Amplitude, nm
	2.95	2.6	2.3	1.3	1.22		
Time							
10:23:0.1			D			3	0.06
10:27:15.0		D	D				
10:28:16.3	D	D	D	D	D	1	3.95
10:35:47.5		D	D			3	0.24
10:47:22.0	D	D	D	D	D	1	0.46
11:02:4.0						2	0.04
11:27:43.0		D	D				
11:40:0.0	D	D	D		D	1	1.40
11:44:49.6	D	D	D	D	D	1	3.18
11:52:19.0						2	0.07
11:58:50.0						2	0.04
12:01:33.5	D	D	D			1	0.51
12:02:45.0						2	0
12:11:33.2	D	D	D	D	D	1	0.83
12:13:49.0						2	0.07
12:26:36.0	D	D	D			3	0.25
12:32:28.0						3	0
12:33:32.0		D	D			3	0.25
12:42:19.0			D				
12:45:28.0		D	D			2	0.09
13:0:2.0						2	0.07
14:07:52.0						2	0.09
14:40:39.0	D	D	D	D	D	2	1.02
15:19:25.2		D	D			3	0.19
15:21:59.0						2	0.10
15:38:2.5						3	0.22
15:55.57.0						3	0
16:02:28.5	D	D	D	D	D	1	1.59
16:05:9.0			D			1	0.66
16:09:18.0			D			2	0.24
16:21:29			D				
Total detections	9	15	20	6	7	27	
False detections	0	0	0	2	5		
False triggers	11	22	110	30	209		

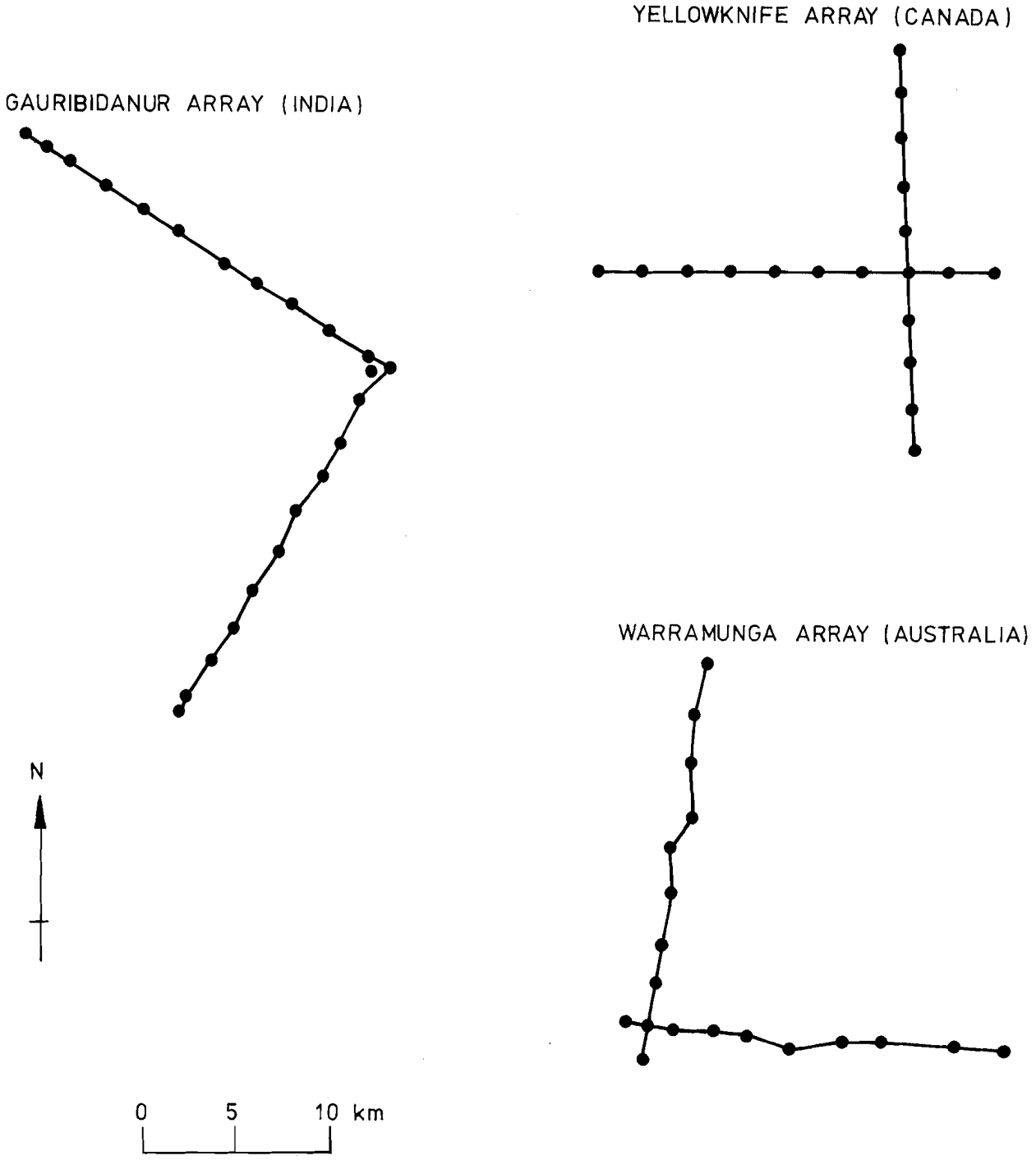

FIGURE 1. LAYOUT OF THE SEISMOMETERS AT THE THREE UK-TYPE ARRAYS: GAURIBIDANUR, INDIA (GBA); WARRAMUNGA, AUSTRALIA (WRA); AND YELLOWKNIFE, CANADA (YKA)

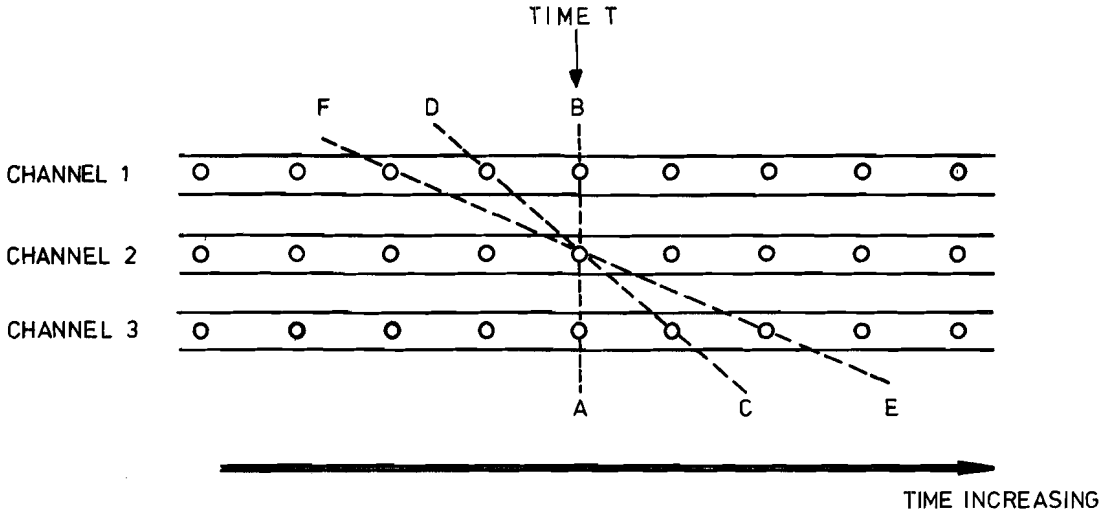

FIGURE 2(a). DIAGRAMMATIC REPRESENTATION OF THE BASIC PROCESS OF BEAM FORMING

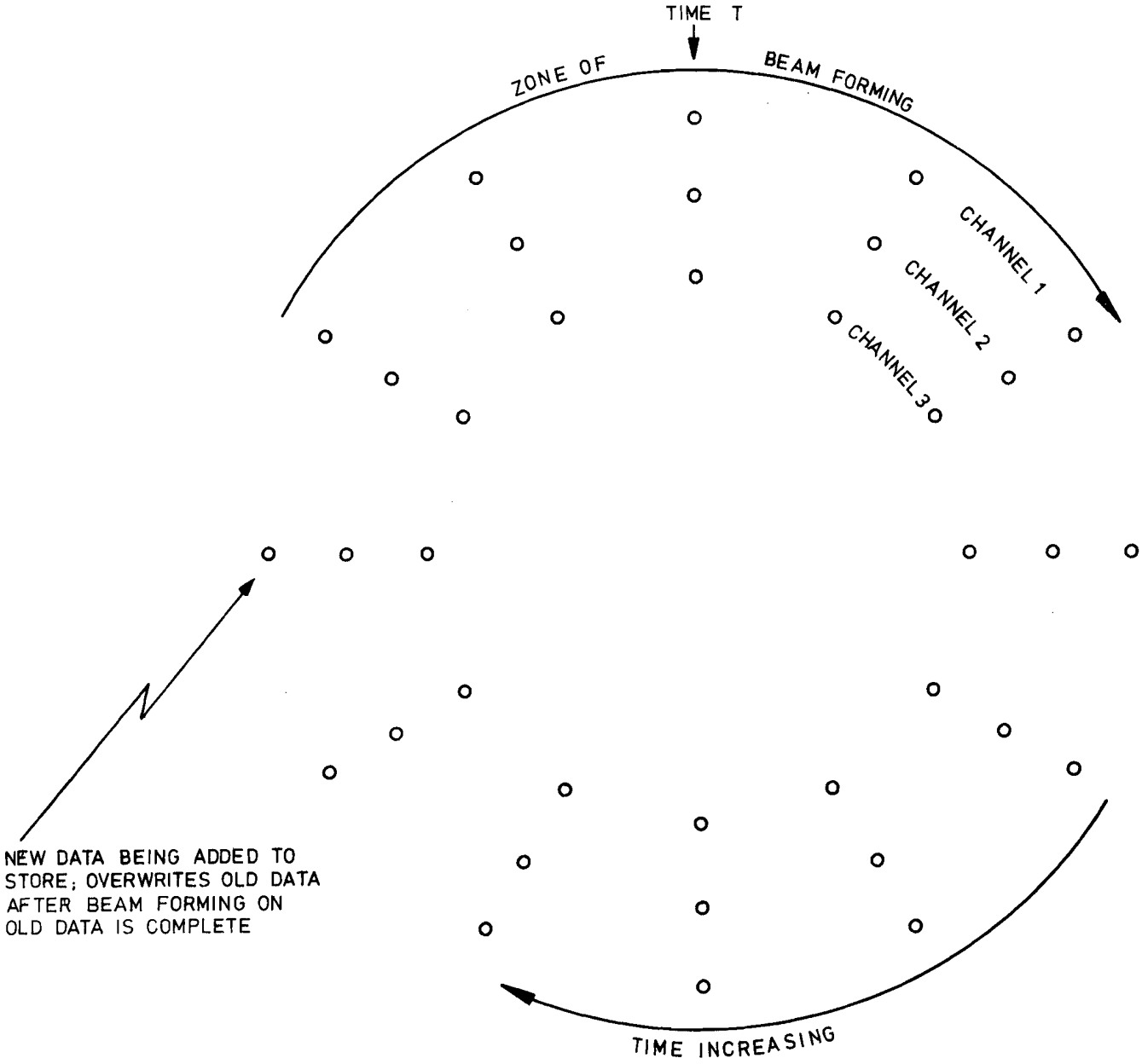

FIGURE 2(b). BEAM FORMING USING A RING BUFFER

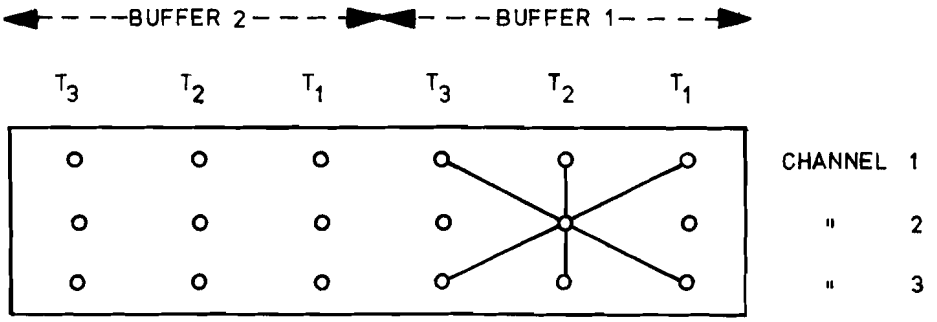

FIGURE 3(a). BEAM FORMING AT TIME T_2; PROCESS CONFINED TO BUFFER 1

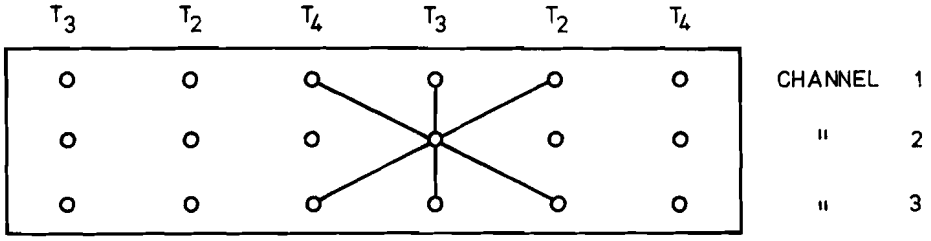

FIGURE 3(b). DATA FROM TIME T_4 REPLACES DATA FROM TIME T_1 IN BOTH BUFFERS AND BEAM FORMING MOVES TO T_3. BEAM FORMING PROCESS NOW OVERLAPS FROM BUFFERS 1 AND 2

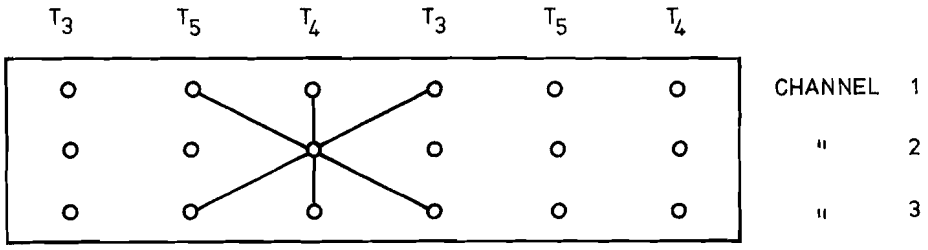

FIGURE 3(c). DATA FROM TIME T_5 REPLACES DATA FROM TIME T_2 IN BOTH BUFFERS AND BEAM FORMING MOVES TO T_4

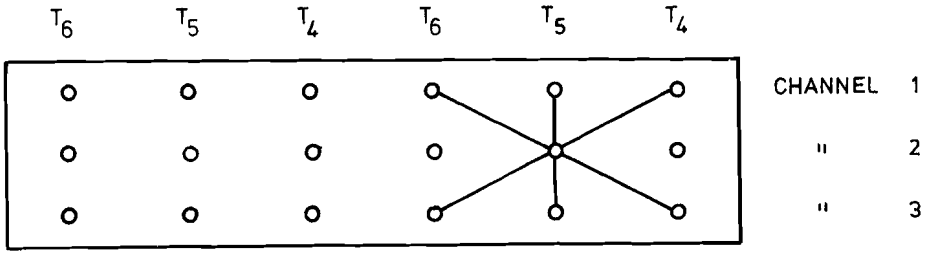

FIGURE 3(d). DATA FROM TIME T_6 REPLACES DATA FOR TIME T_3 IN BOTH BUFFERS AND BEAM FORMING PROCESS RETURNS TO BUFFER 1 FOR TIME T_5. THE SEQUENCE OF OPERATIONS 3(a) to 3(d) IS NOW REPEATED

FIGURE 3. BEAM FORMING USING DUAL BUFFERS

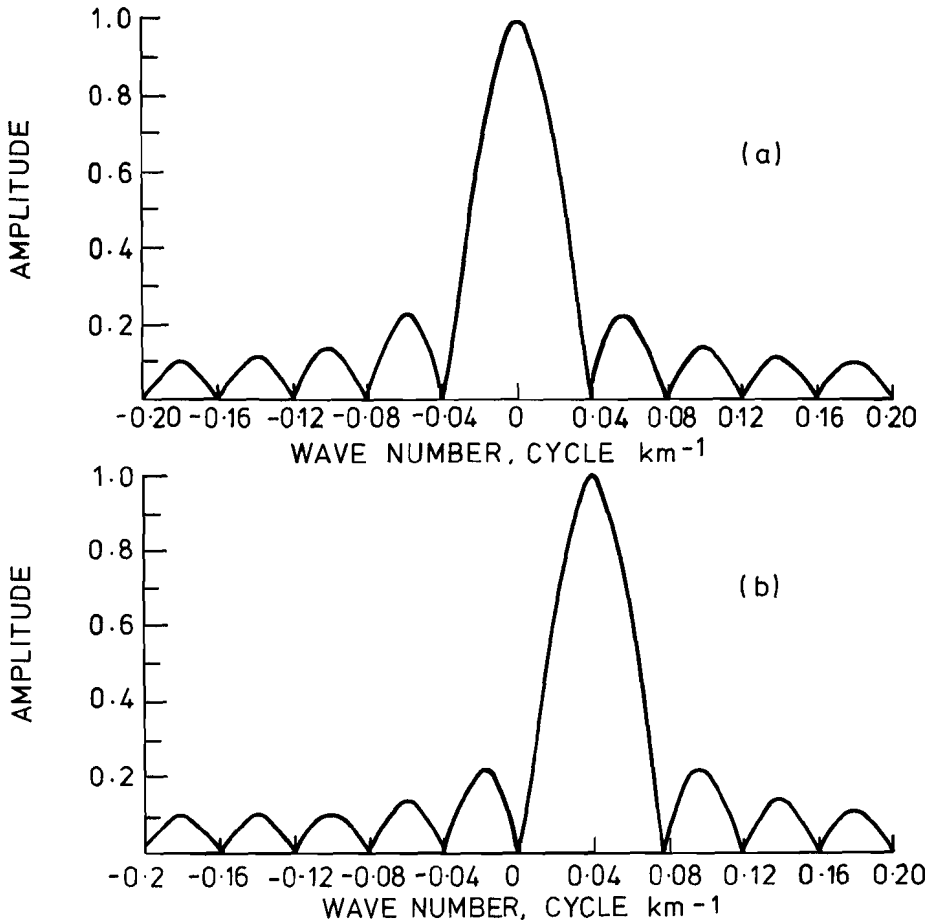

FIGURE 4. WAVE NUMBER RESPONSE OF AN ARRAY OF TEN SEISMOMETERS SPACED AT EQUAL INTERVALS IN A LINE OF LENGTH 25 KM (SPACING 2.5 KM)

FIGURE 4(a). RESPONSE FOR SUMMING WITHOUT DELAYS

FIGURE 4(b). RESPONSE FOR SUMMING FOR SLOWNESS 0.04/f

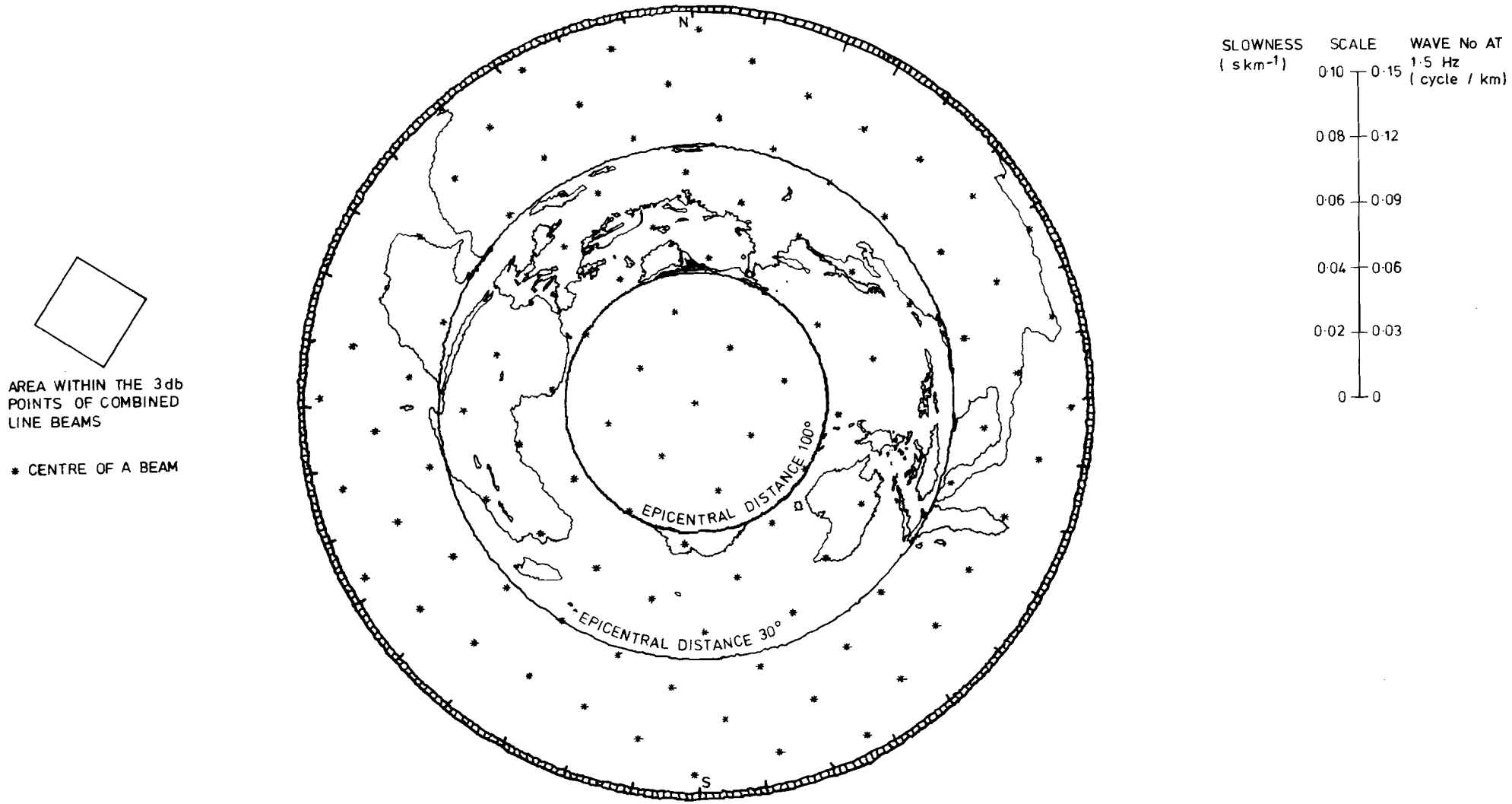

FIGURE 5(a). DISTRIBUTION OF THE BEAM CENTRES (IN THE K PLANE) FOR THE ARRAYS AT GAURIBIDANUR, INDIA

THE PARALLELOGRAM FORMED BY THE INTERSECTION OF THE 3 DB LIMITS FOR THE COMPONENT LINE BEAMS AROUND EACH BEAM CENTRE IS SHOWN FOR EACH ARRAY. NOTE THAT WITH THIS DISTRIBUTION OF BEAMS ALL THE EARTH AT DISTANCES OF MORE THAN 30° FROM THE ARRAY LIES WELL WITHIN THE 3 DB LIMITS FOR AT LEAST ONE BEAM.

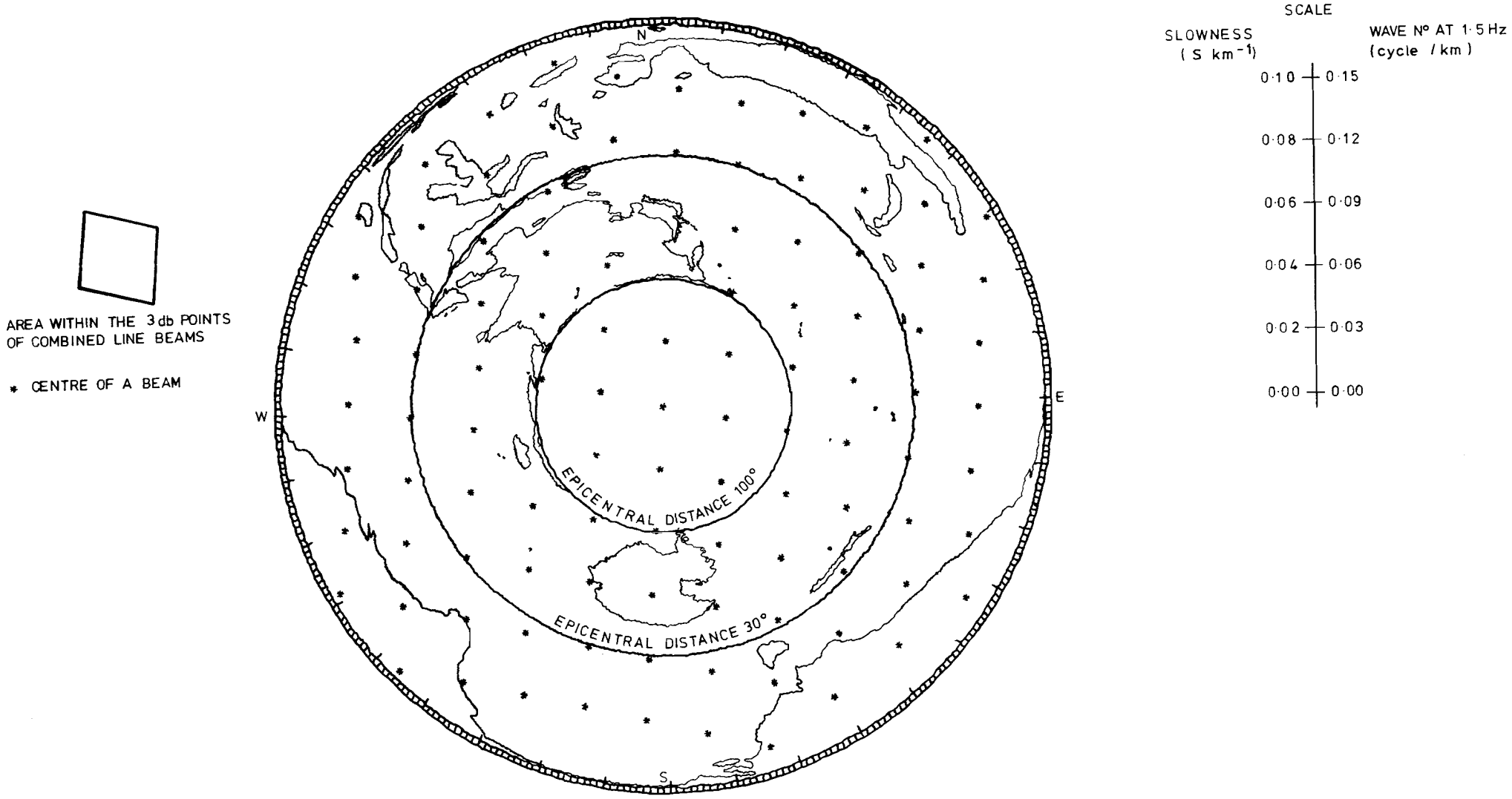

FIGURE 5(b). DISTRIBUTION OF THE BEAM CENTRES (IN THE K PLANE) FOR THE ARRAYS AT WARRAMUNGA, AUSTRALIA

THE PARALLELOGRAM FORMED BY THE INTERSECTION OF THE 3 DB LIMITS FOR THE COMPONENT LINE BEAMS AROUND EACH BEAM CENTRE IS SHOWN FOR EACH ARRAY. NOTE THAT WITH THIS DISTRIBUTION OF BEAMS ALL THE EARTH AT DISTANCES OF MORE THAN 30° FROM THE ARRAY LIES WELL WITHIN THE 3 DB LIMITS FOR AT LEAST ONE BEAM.

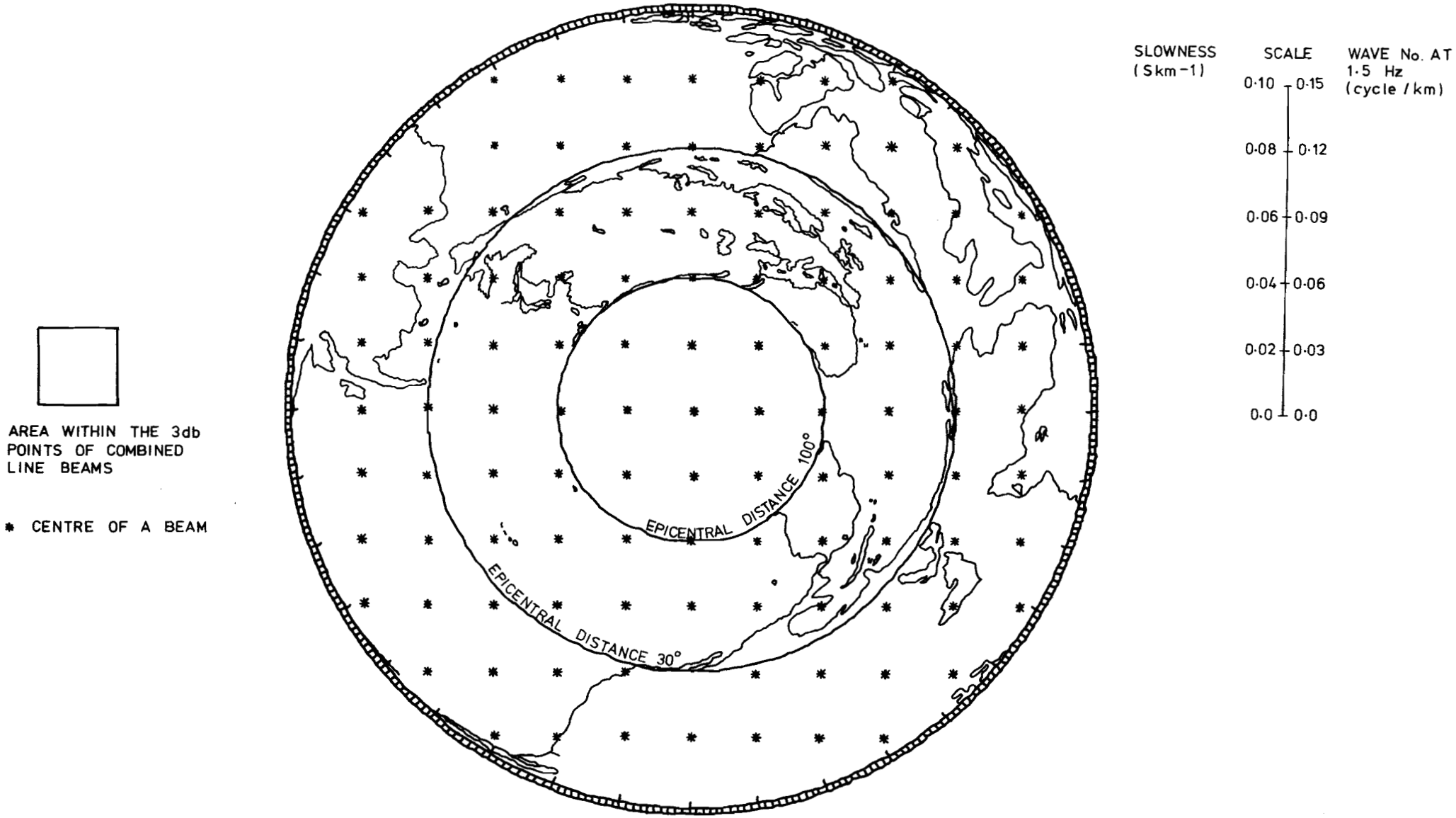

FIGURE 5(c). DISTRIBUTION OF THE BEAM CENTRES (IN THE K PLANE) FOR THE ARRAYS AT YELLOWKNIFE, CANADA

THE PARALLELOGRAM FORMED BY THE INTERSECTION OF THE 3 DB LIMITS FOR THE COMPONENT LINE BEAMS AROUND EACH BEAM CENTRE IS SHOWN FOR EACH ARRAY. NOTE THAT WITH THIS DISTRIBUTION OF BEAMS ALL THE EARTH AT DISTANCES OF MORE THAN 30° FROM THE ARRAY LIES WELL WITHIN THE 3 DB LIMITS FOR AT LEAST ONE BEAM.

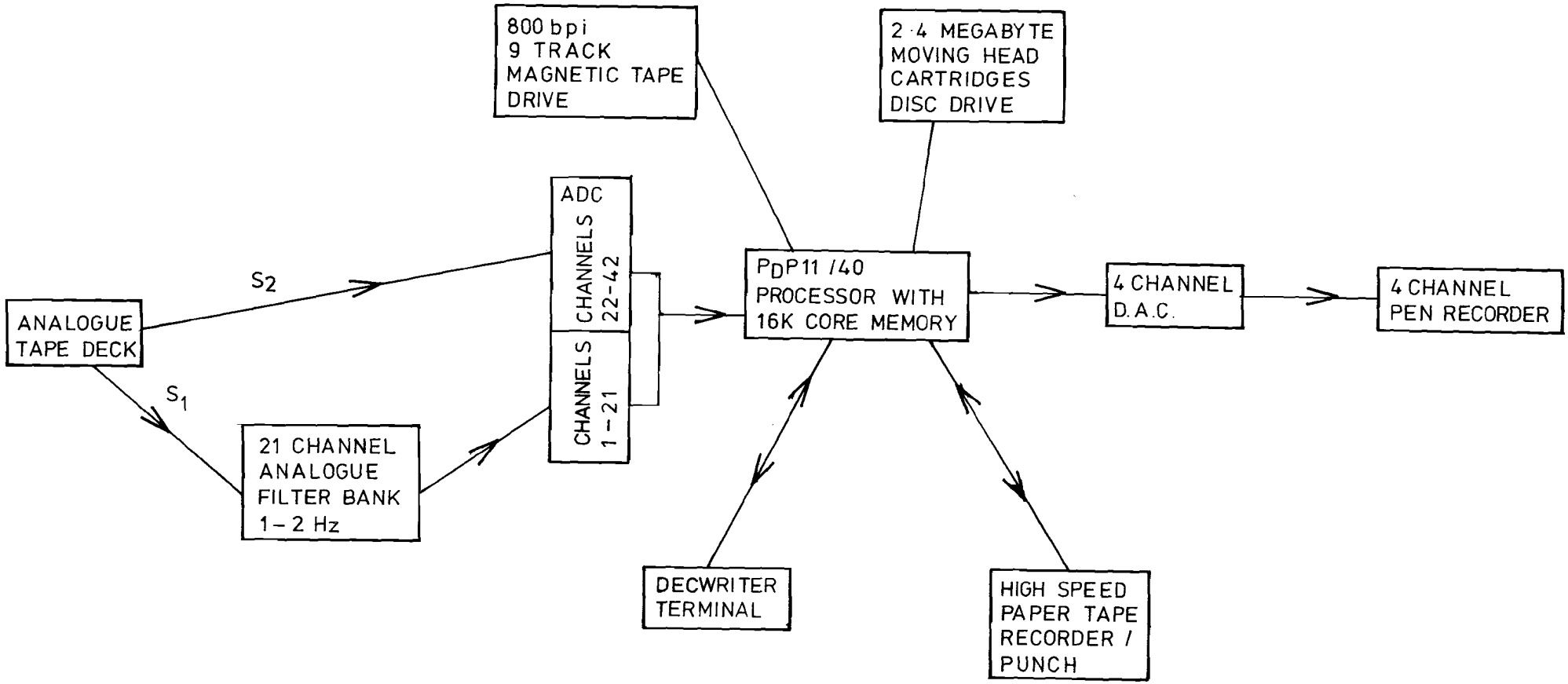

FIGURE 6. BLOCK LAYOUT OF THE ANALOGUE SASP HARDWARE

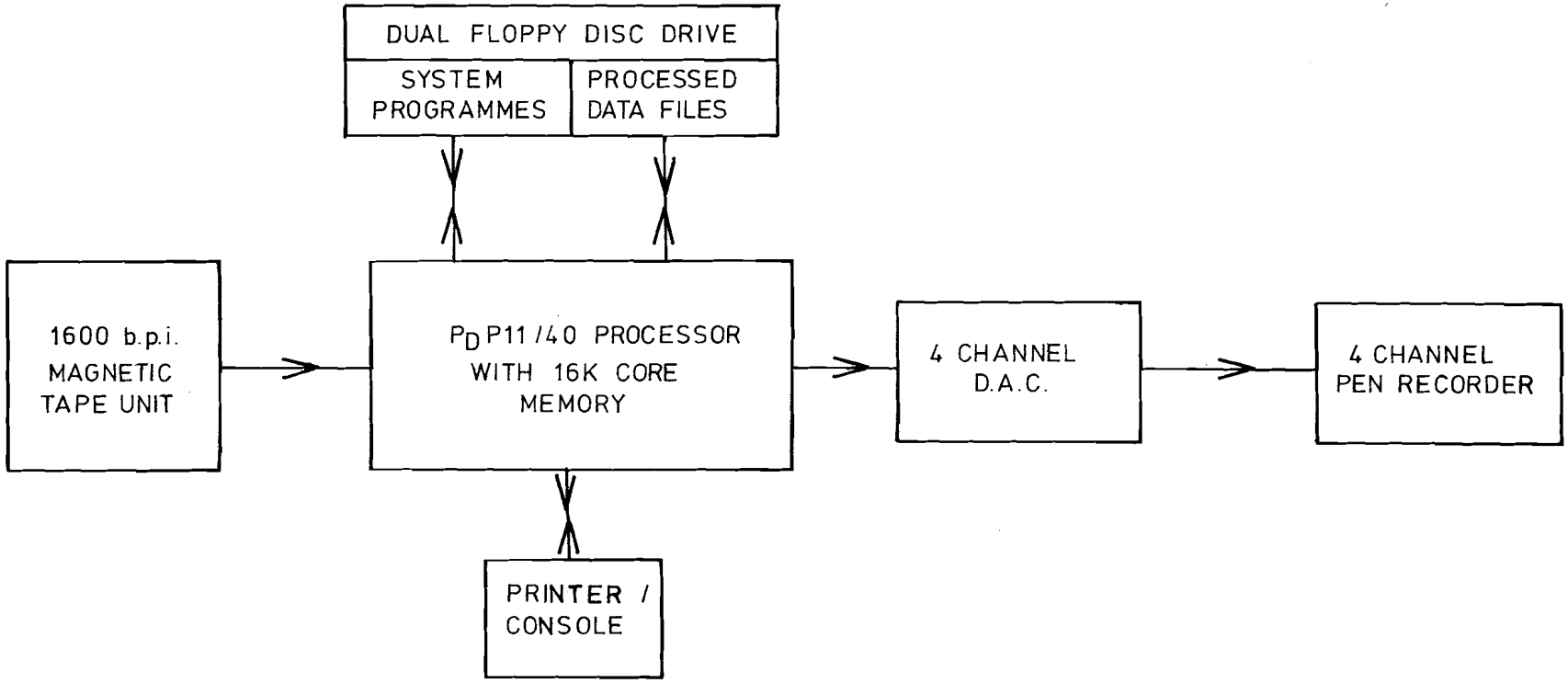

FIGURE 7. BLOCK LAYOUT OF THE DIGITAL SASP HARDWARE

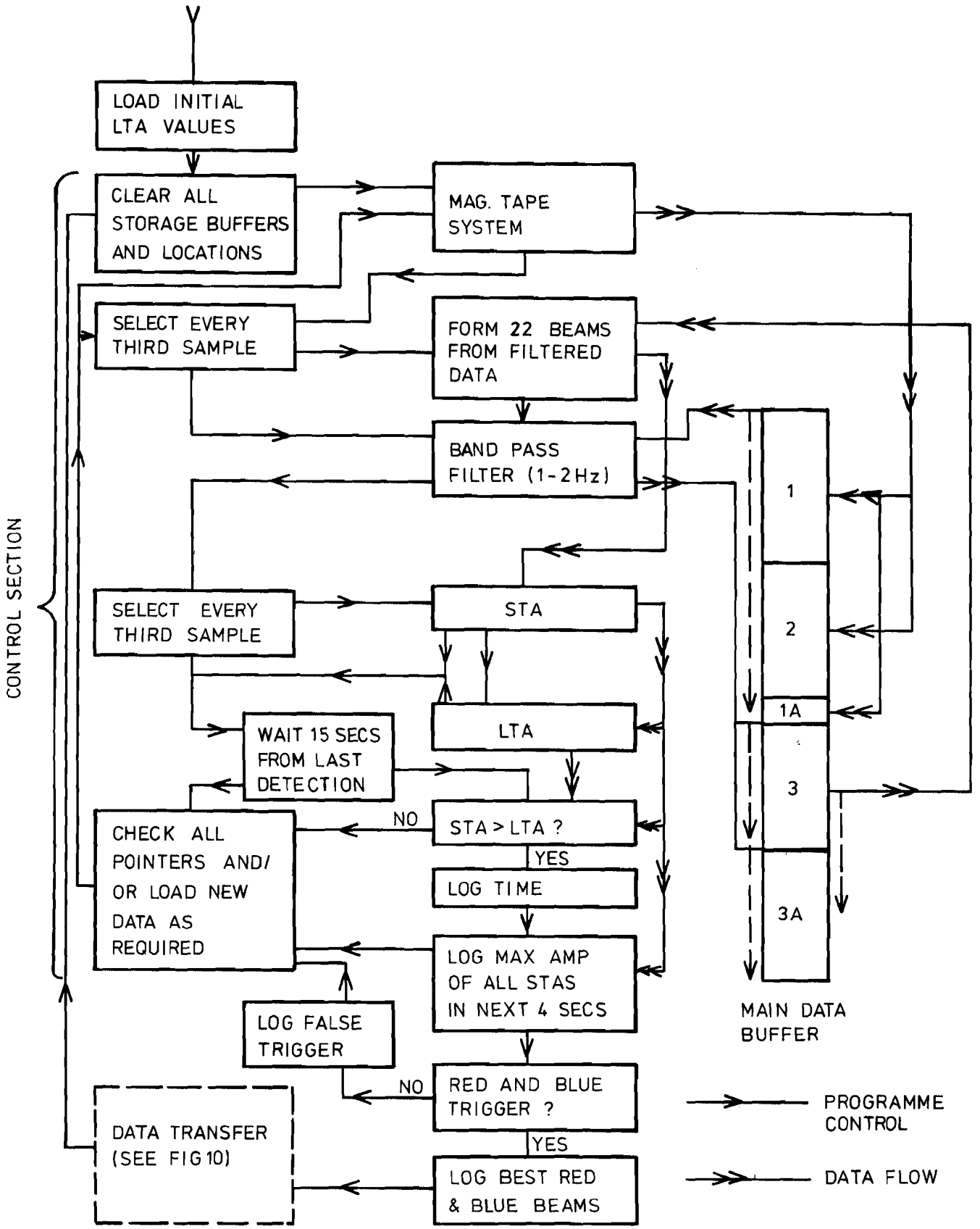

FIGURE 8. SIMPLIFIED BLOCK DIAGRAM OF THE SEARCH PROCESS

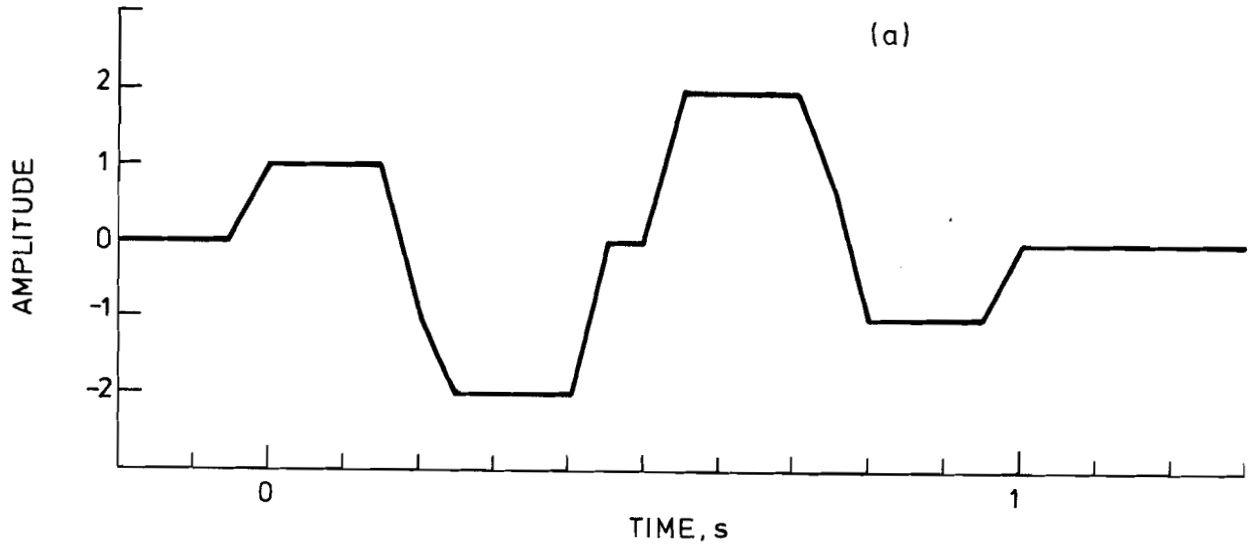

FIGURE 9(a). IMPULSE RESPONSE OF 1 - 2 HZ DIGITAL FILTER

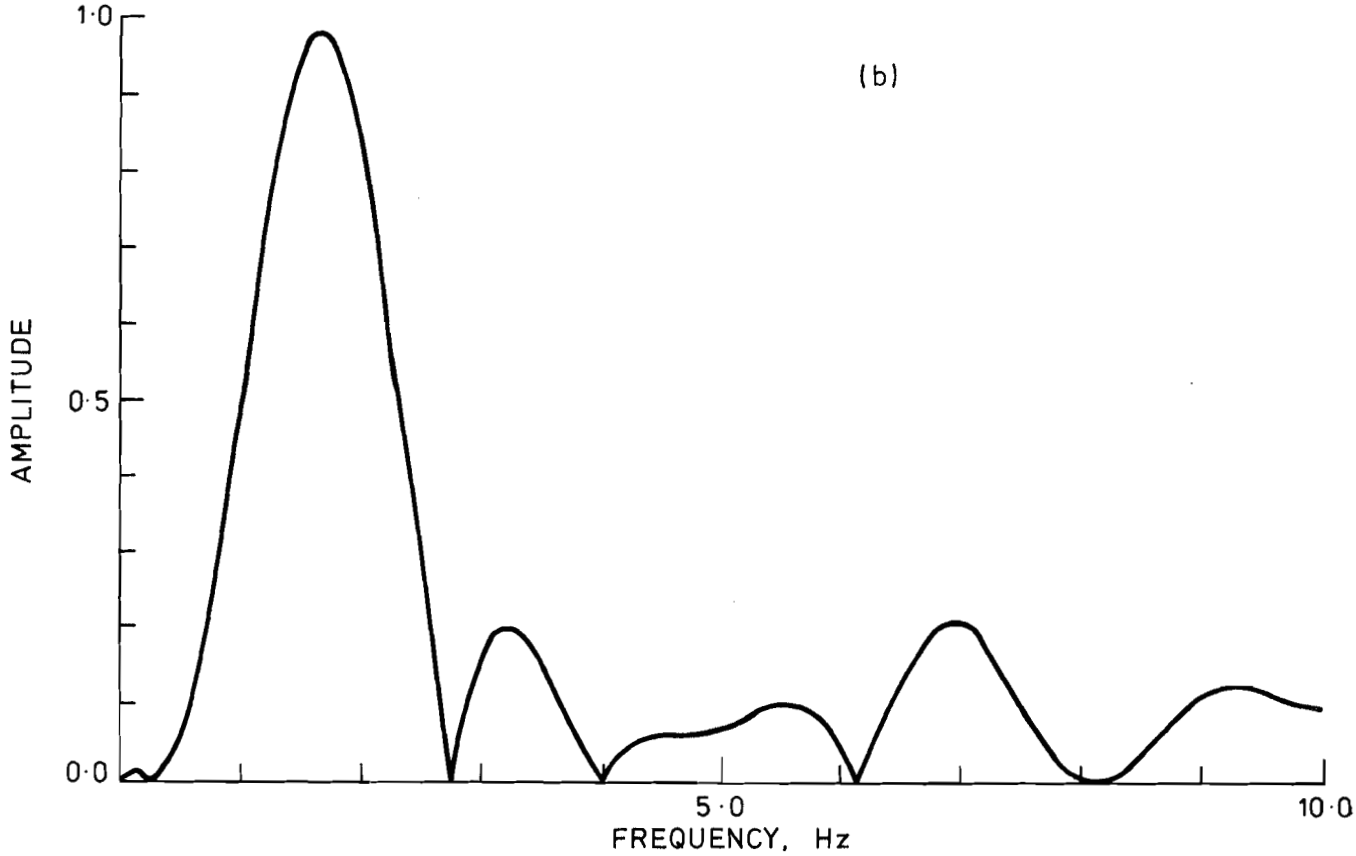

FIGURE 9(b). AMPLITUDE RESPONSE OF 1 - 2 HZ DIGITAL FILTER

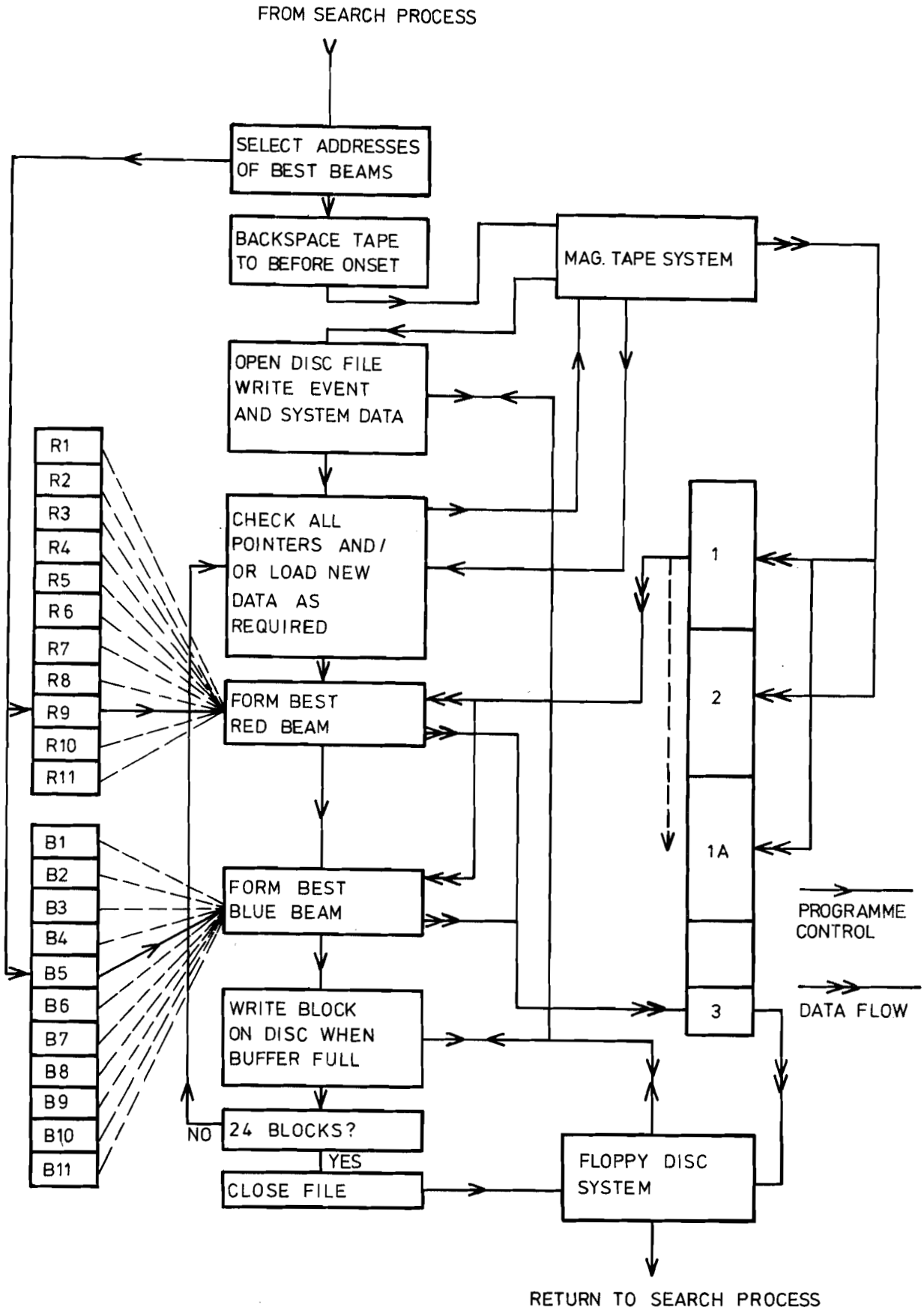

FIGURE 10. SIMPLIFIED BLOCK DIAGRAM OF THE DATA TRANSFER PROCESS

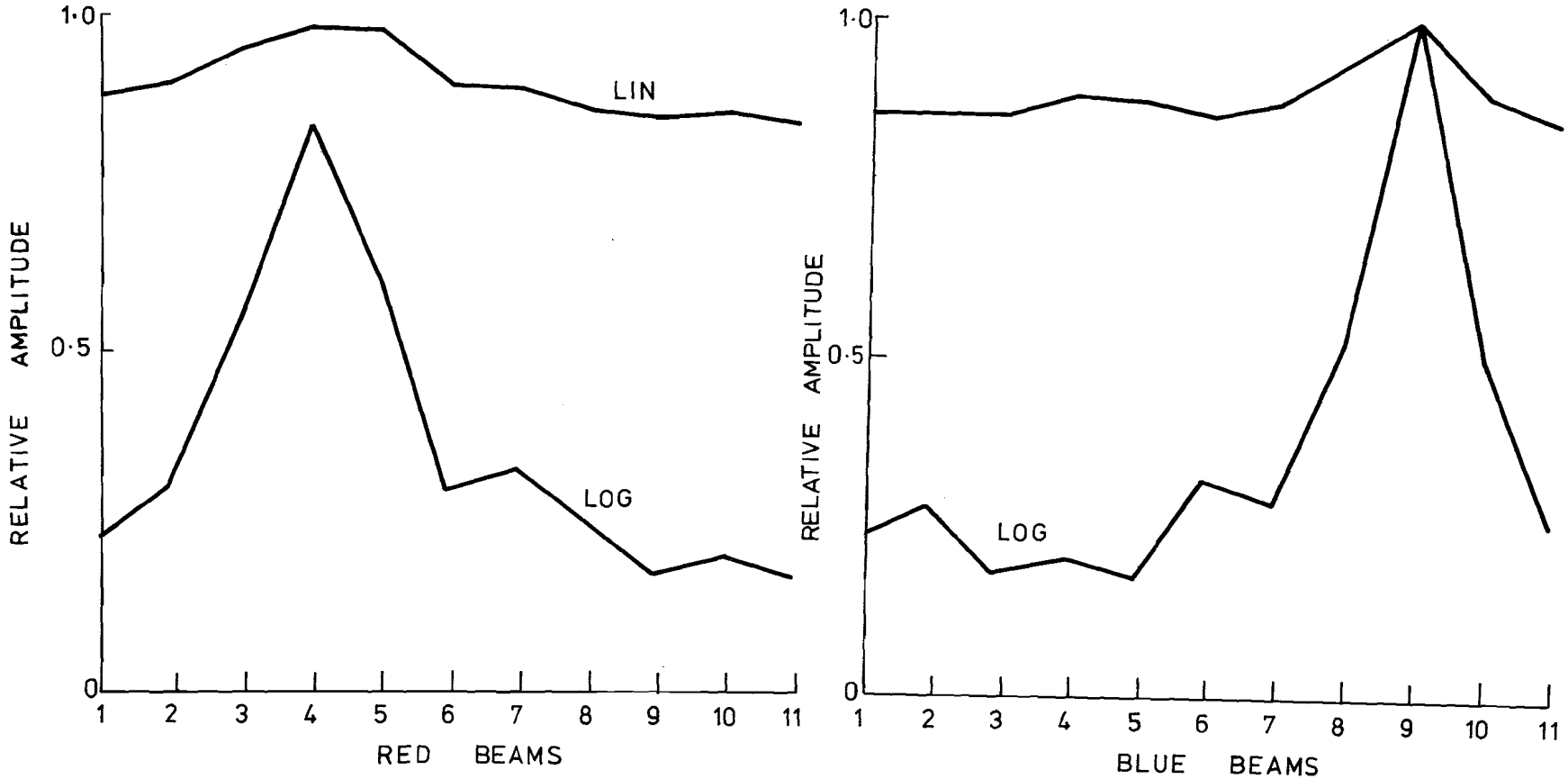

FIGURE 11. COMPARISON OF BEAM AMPLITUDES FOR LOGARITHMIC AND LINEAR DETECTORS

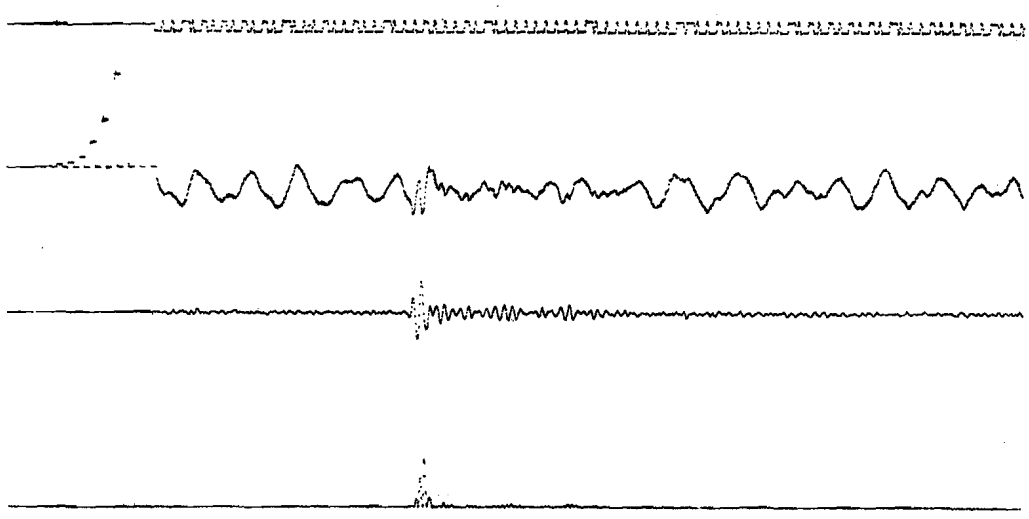

FIGURE 12(a). SIGNAL DETECTED AT 12:11:33.2 (ISM MAGNITUDE m_b 3.88)

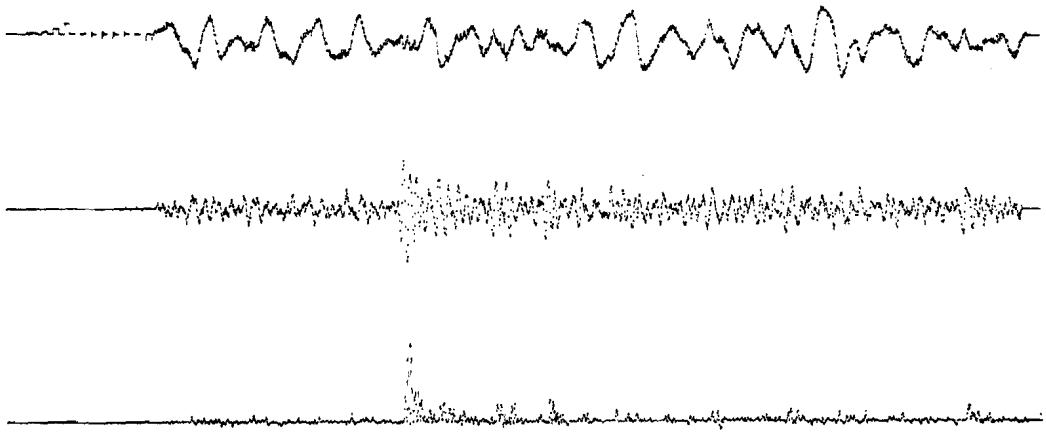

(b) FIGURE 12(b). SIGNAL DETECTED AT 11:27:43

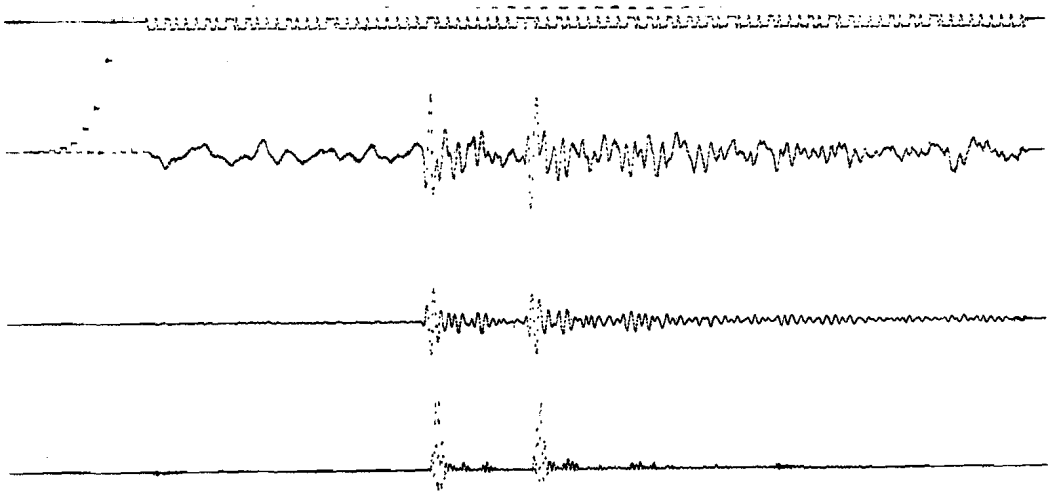

FIGURE 12(c). SIGNAL DETECTED AT 11:44:49.6 (ISM MAGNITUDE m_b 4.76)

FIGURE 12. EXAMPLES OF SIGNALS DETECTED AND PROCESSED BY THE DIGITAL SASP. DATA FOR 1972, FEBRUARY 24, FROM YELLOWKNIFE, CANADA

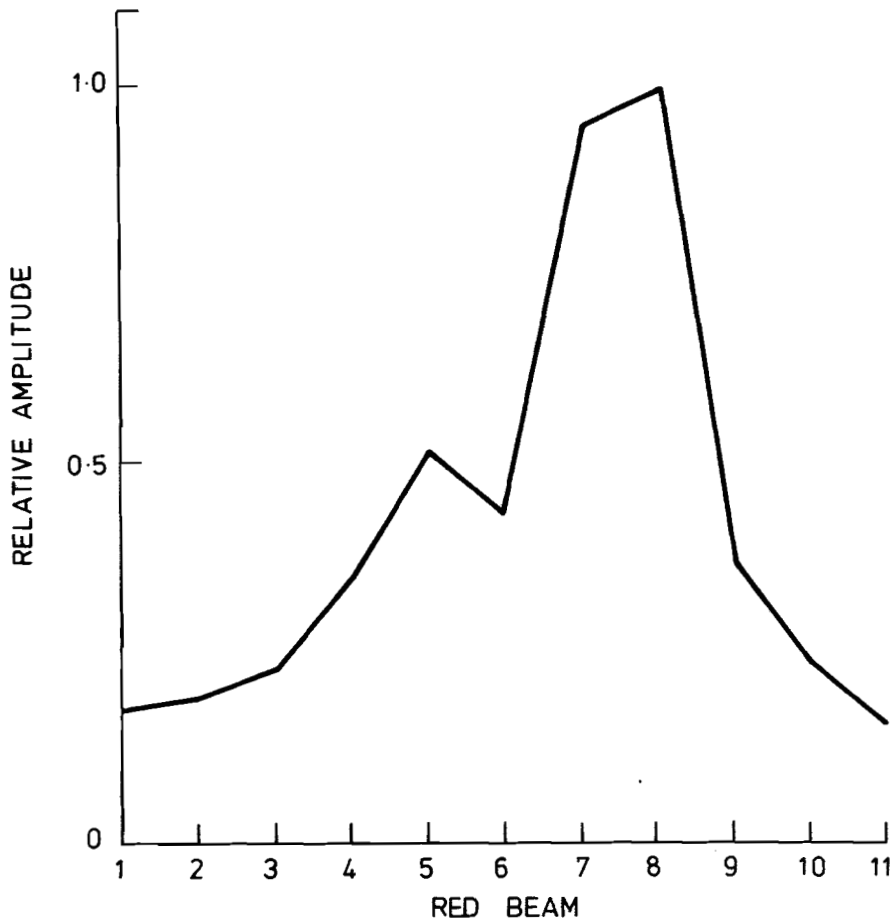

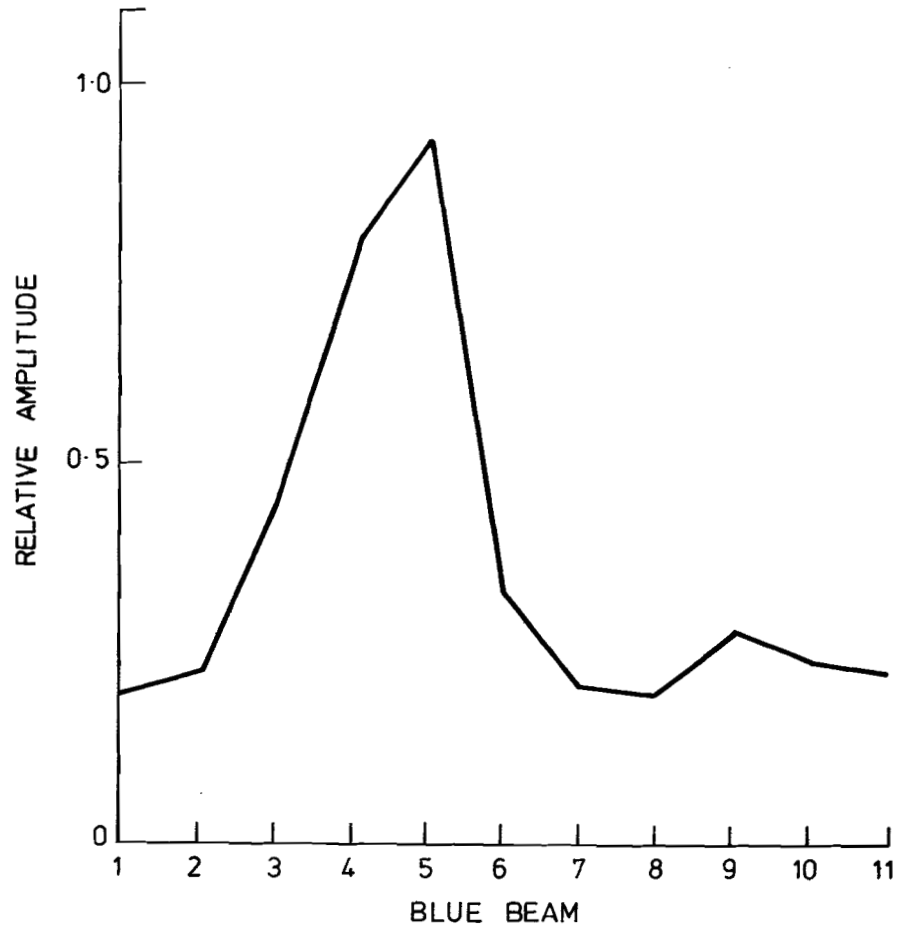

FIGURE 13. LOGARITHMIC BEAM AMPLITUDES FOR SIGNAL SHOWN IN FIGURE 12(c)

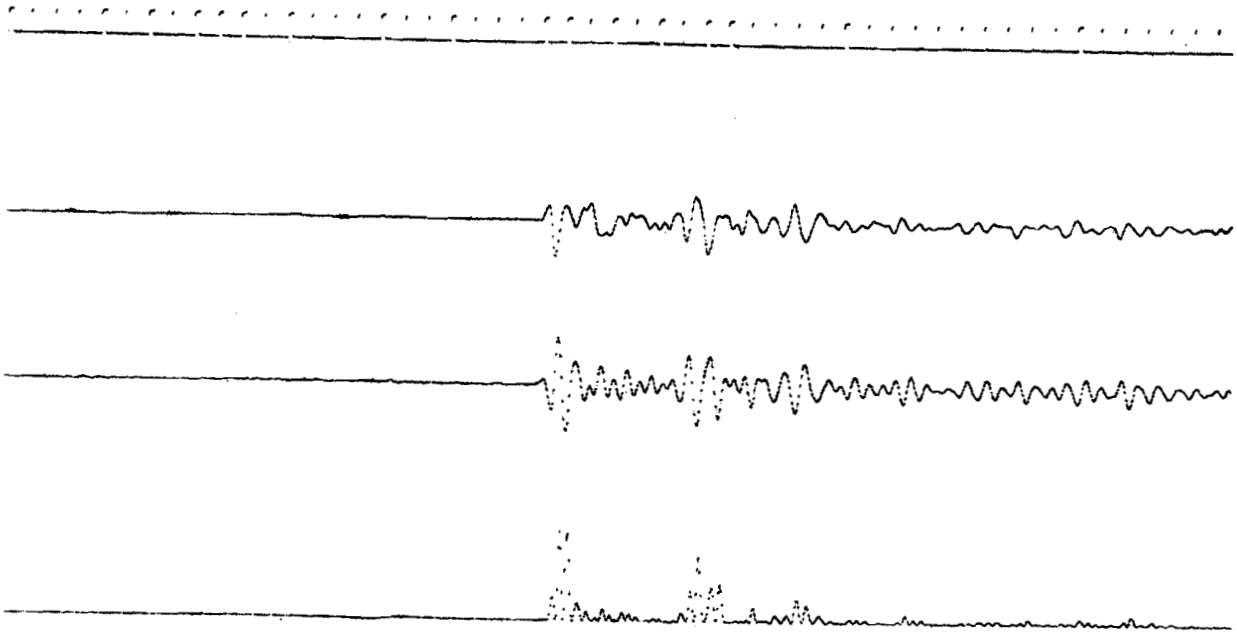

FIGURE 14(a). P SIGNAL FOR EARTHQUAKE WITH EPICENTRE WEST OF MACQUARIE ISLAND (ORIGIN TIME 23:51:59.2, m_b 5.1)

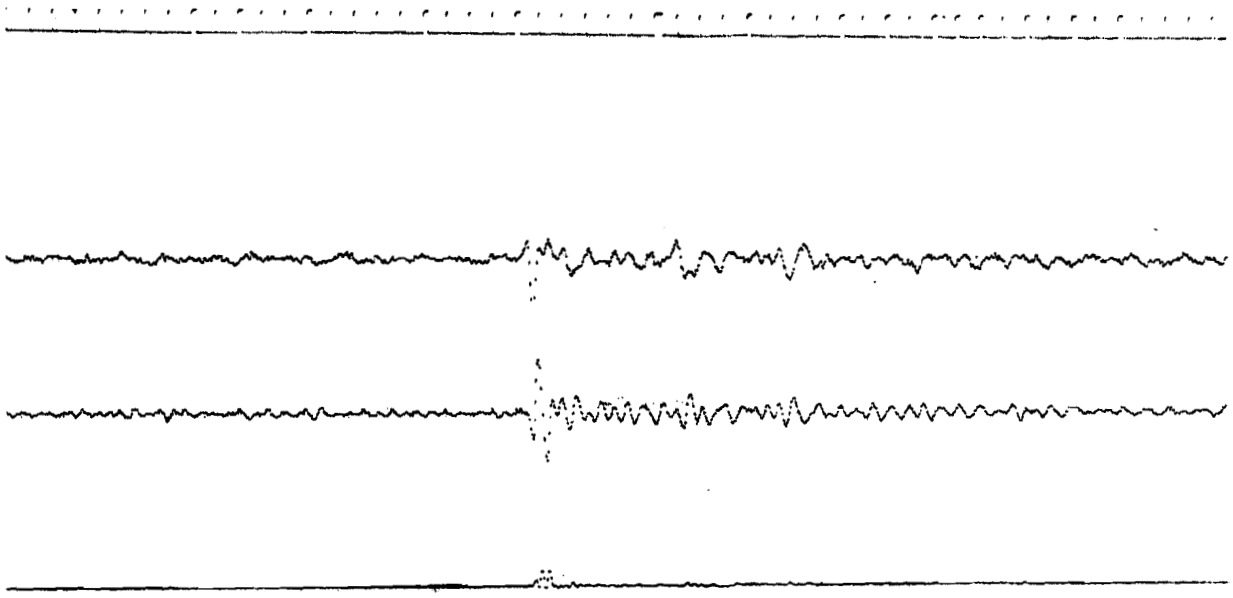

FIGURE 14(b). PcP FOR EARTHQUAKES SHOWN IN FIGURE 14(a)

FIGURE 14. EXAMPLES OF SIGNALS DETECTED AND PROCESSED BY THE DIGITAL SASP. DATA FOR 1971, JUNE 23, FROM WARRAMUNGA, AUSTRALIA

APPENDIX A

SPECIFICATIONS

A1. ANALOGUE TAPE DECK

Type:	EMI TD4 28 channel
Manufacturer:	EMI (Electronics)
Tape Speeds:	1.2, 2.4, 4.8, 9.6, 19.2 and 38.4 in. s^{-1}

A2. ANALOGUE TAPE LOOP

Type:	MR 1200
Manufacturer:	Epsylon

A3. ANALOGUE FILTERS

Type:	4 pole Butterworth filters
Manufacturer:	KEMO, Beckenham
Pass Band:	1 - 2 Hz (at 3 db points)

A4. ANALOGUE-TO-DIGITAL

UKAEA, Culham Laboratories

Number of Channels:	42
Sample and Hold Unit:	ANALOG DEVICES SHA-5
Analogue-to-Digital Convertors:	ANALOG DEVICES ADC-12QZ
Number of Bits:	12
Overall Conversion Rate:	5 kHz
Input Amplifier Signal Range:	±5 V
Least Significant Bit:	2.5 mV

A5. DIGITAL COMPUTER

Manufacturer:	Digital Equipment Corporation
Central Processor:	PDP11/40 with 16 bit word
Storage:	32000 bytes

Peripherals:	PC11/PR11 high speed paper tape reader/punch; TM11 800 bpi 9 track magnetic tape drive; LA30 Decwriter terminal; RK11 2.4 megabyte moving head; Cartridge disc drive

A6. DIGITAL-TO-ANALOGUE CONVERTORS

Manufacturer:	Digital Equipment Corporation
Type:	AA11-D
Number of Channels:	4
Interface Unit:	DR11-A

APPENDIX B

CALCULATION OF SLOWNESS AND AZIMUTH OF A PLANE WAVE FROM THE TWO COMPONENTS OF SLOWNESS ON THE ARMS OF AN ARRAY

Let the two arms of the array be as shown in figure B1. Let ψ be the angle between N, and the arm AB with strike nearest N-S. Let ϕ be the angle between the arms. Then, for a plane wave front, perpendicular distance d from the origin O at time t, the slowness $S = t/d$.

If θ is the angle between the arm AB and the perpendicular to the wave front, then S_y, the slowness along AB, is given by

$$S_y = t \cos \theta / d,$$

$$= S \cos \theta. \qquad \text{.....(B1)}$$

Now the slowness S_x along CD is given by

$$S_x = t \cos (\phi - \theta)/d,$$

$$= S \cos (\phi - \theta), \qquad \text{.....(B2)}$$

thus,

$$S_x/S_y = \cos (\phi - \theta)/\cos \theta,$$

$$= \cos \phi + \tan \theta \sin \phi,$$

so θ is given by

$$\tan \theta = (S_x/S_y - \cos \phi)/\sin \phi.$$

The azimuth is then $\psi + \theta$.

The slowness S can then be found either using equation (B1) or (B2) or

$$S^2 = (S_y^2 + S_x^2)/\{\cos^2 \theta + \cos^2 (\phi - \theta)\}, \qquad \text{.....(B3)}$$

S can always be found using equation (B3), whereas equation (B1) cannot be used if $\theta = \pi/2$ and equation (B2) cannot be used if $(\phi - \theta) = \pi/2$.

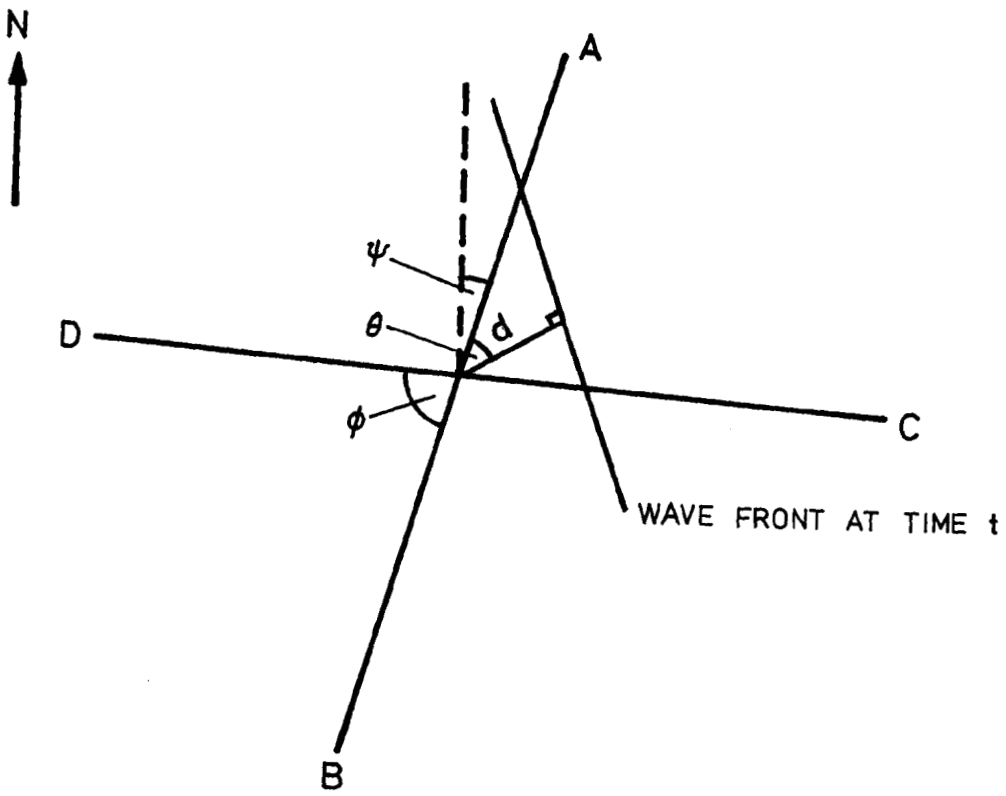

FIGURE B1. RELATION OF PLANE WAVE AT AN ARRAY TO THE ARRAY ARMS AB AND CD

APPENDIX C

CO-ORDINATES OF BEAMS PROJECTED ON TO THE EARTH'S SURFACE

Each of the 121 beams formed for a given array by SASP can be specified by the components of slowness on each of the two arms of the array. The beams can also be specified by:-

(a) Azimuth and slowness.

(b) Azimuth and speed.

(c) Azimuth and distance of the projection of the beam on to the earth's surface.

(d) Latitude and longitude of the projection of the beam on to the earth's surface.

Tables C1, C2 and C3 give the specifications of the SASP beams in each of these ways for the arrays Gauribidanur, India; Warramunga, Australia; and Yellowknife, Canada respectively.

TABLE C1

GBA: PART 1

GAURIDIDANUR ARRAY

0.14	347.0	0.13	353.3	0.12	1.0	0.11	10.2	0.10	20.7	0.10	32.0	0.10	43.3	0.11	53.8	0.12	63.0	0.13	70.7	0.14	77.0	SLOWNESS	AZIMUTH
7.07	347.0	7.81	353.3	8.57	1.0	9.28	10.2	9.81	20.7	10.00	32.0	9.81	43.3	9.28	53.8	8.57	63.0	7.81	70.7	7.07	77.0	VELOCITY	AZIMUTH
-1.00	347.0	-1.00	353.3	15.92	1.0	18.58	10.2	19.89	20.7	20.36	32.0	19.89	43.3	18.58	53.8	15.92	63.0	-1.00	70.7	-1.00	77.0	DISTANCE	AZIMUTH
12.62N	77.7E	12.60N	77.6E	29.60N	77.8E	31.94N	81.2E	32.13N	85.6E	30.56N	89.8E	27.58N	92.7E	24.01N	99.6E	20.97N	92.5E	19.27N	76.5E	19.38N	76.4E	LATITUDE	LONGITUDE
INDIA		INDIA		NORTHERN INDIA		TIBET		TIBET		TIBET		INDIA-CHINA BORDER REGION		BURMA-INDIA BORDER REGION		BURMA		INDIA		INDIA			

												0.08	46.0	0.09	58.6	0.10	68.9	0.11	77.0	0.13	83.3	SLOWNESS	AZIMUTH
0.13	340.7	0.11	347.0	0.10	355.1	0.09	5.4	0.08	18.0	0.08	32.0	12.13	46.0	11.18	58.6	10.00	68.9	8.84	77.0	7.81	83.3	VELOCITY	AZIMUTH
7.81	340.7	8.84	347.0	10.00	355.1	11.18	5.4	12.13	18.0	12.50	32.0	25.86	46.0	23.03	58.6	20.36	68.9	17.16	77.0	-1.00	83.3	DISTANCE	AZIMUTH
-1.00	340.7	17.16	347.0	20.36	355.1	23.03	5.4	25.86	18.0	29.86	32.0	30.48N	98.8E	24.57N	98.9E	20.07N	97.6E	16.84N	94.9E	13.49N	76.4E	LATITUDE	LONGITUDE
12.65N	77.8E	30.36N	73.0E	33.97N	75.4E	36.51N	80.1E	38.05N	87.2E	38.01N	96.9E	TIBET		BURMA-CHINA BORDER REGION		BURMA		SOUTH BURMA		INDIA			
INDIA		INDIA-PAKISTAN BORDER REGION		EASTERN KASHMIR		SOUTHERN SINKIANG PROV., CHINA				TSINGHAI PROVINCE, CHINA													
						SOUTHERN SINKIANG PROV., CHINA																	

												0.06	50.4	0.07	65.7	0.08	77.0	0.10	85.1	0.12	91.0	SLOWNESS	AZIMUTH
0.12	333.0	0.10	338.9	0.08	347.0	0.07	358.3	0.06	13.6	0.06	32.0	15.81	50.4	13.87	65.7	11.79	77.0	10.00	85.1	8.57	91.0	VELOCITY	AZIMUTH
8.57	333.0	10.00	338.9	11.79	347.0	13.87	358.3	15.81	13.6	16.67	32.0	57.60	50.4	41.13	65.7	24.60	77.0	20.36	85.1	15.92	91.0	DISTANCE	AZIMUTH
15.92	333.0	20.36	338.9	24.60	347.0	44.13	358.3	57.60	13.6	62.96	32.0	40.59N	136.2E	26.67N	122.6E	17.78N	102.6E	14.44N	98.4E	12.79N	93.8E	LATITUDE	LONGITUDE
27.70N	69.4E	32.49N	68.9E	37.55N	70.7E	57.79N	75.2E	67.54N	108.5E	57.39N	138.1E	EASTERN SEA OF JAPAN		TAIWAN REGION		SOUTHEAST ASIA		SOUTH BURMA		ANDAMAN ISLANDS REGION			
INDIA-PAKISTAN BORDER REGION		AFGHANISTAN		AFGHANISTAN-USSR BORDER REGION		CENTRAL USSR		CENTRAL SIBERIA		EASTERN USSR													

												0.04	58.6	0.06	77.0	0.07	88.3	0.09	95.4	0.11	100.2	SLOWNESS	AZIMUTH
0.11	323.8	0.09	328.6	0.07	335.7	0.06	347.0	0.04	5.4	0.04	32.0	22.36	58.6	17.68	77.0	13.87	88.3	11.18	95.4	9.28	100.2	VELOCITY	AZIMUTH
9.28	323.8	11.18	328.6	13.87	335.7	17.68	347.0	22.36	5.4	25.00	32.0	84.99	58.6	68.63	77.0	44.13	88.3	23.03	95.4	18.58	100.2	DISTANCE	AZIMUTH
18.58	323.8	23.03	328.6	44.13	335.7	68.63	347.0	84.99	5.4	999.99	32.0	31.88N	169.9E	16.90N	148.8E	10.89N	122.6E	10.33N	100.8E	9.66N	96.0E	LATITUDE	LONGITUDE
28.30N	65.1E	32.84N	63.4E	51.88N	49.9E	75.43N	21.6E	80.01N	135.3W	999.99	999.9	NORTH PACIFIC OCEAN		PANAY, PHILIPPINE ISLANDS				NICOBAR ISLANDS REGION					
PAKISTAN		SOUTHWESTERN AFGHANISTAN		EUROPEAN USSR		SVALBARD REGION		ARCTIC OCEAN				MARIANA ISLANDS REGION				GULF OF THAILAND							

												0.03	77.0	0.04	95.4	0.06	103.6	0.08	108.0	0.10	110.7	SLOWNESS	AZIMUTH
0.10	313.3	0.08	316.0	0.06	320.4	0.04	328.6	0.03	347.0	0.02	32.0	35.36	77.0	22.36	95.4	15.81	103.6	12.13	108.0	9.81	110.7	VELOCITY	AZIMUTH
9.81	313.3	12.13	316.0	15.81	320.4	22.36	328.6	35.36	347.0	50.00	32.0	999.99	77.0	84.99	95.4	57.60	103.6	25.86	108.0	19.90	110.7	DISTANCE	AZIMUTH
19.90	313.3	25.86	316.0	57.60	320.4	84.99	328.6	999.99	347.0	999.99	32.0	999.99	999.9	4.12S	161.3E	3.89S	132.8E	4.59N	102.0E	5.94N	96.1E	LATITUDE	LONGITUDE
26.69N	61.4E	31.21N	56.7E	49.49N	21.9E	58.05N	24.9W	999.99	999.9	999.99	999.9	NORTH OF SOLOMON ISLANDS				WEST IRIAN		MALAY PENINSULA		NORTHERN SUMATRA			
SOUTHERN IRAN		IRAN		POLAND		NORTH ATLANTIC OCEAN																	

												0.02	122.0	0.04	122.0	0.06	122.0	0.08	122.0	0.10	122.0	SLOWNESS	AZIMUTH
0.10	302.0	0.08	302.0	0.06	302.0	0.04	302.0	0.02	302.0	0.0	0.0	50.00	122.0	25.00	122.0	16.67	122.0	12.50	122.0	10.00	122.0	VELOCITY	AZIMUTH
10.00	302.0	12.50	302.0	16.67	302.0	25.00	302.0	50.00	302.0	999.99	0.0	999.99	122.0	999.99	122.0	62.96	122.0	29.86	122.0	20.36	122.0	DISTANCE	AZIMUTH
20.36	302.0	29.86	302.0	62.96	302.0	999.99	302.0	999.99	302.0	999.99	0.0	999.99	999.9	999.99	999.9	20.78S	131.3E	3.11S	102.5E	2.30N	94.6E	LATITUDE	LONGITUDE
29.62N	58.7E	27.50N	49.1E	34.60N	11.1E	999.99	999.9	999.99	999.9	999.99	999.9	NORTHERN TERRITORY, AUSTRALIA						SOUTHERN SUMATRA		OFF W. COAST OF NORTHERN SUMATRA			
EASTERN ARABIAN PENINSULA		EASTERN ARABIAN PENINSULA		TUNISIA																			

												0.0[illegible]	167.0	0.04	148.6	0.06	140.4	0.08	136.0	0.10	133.3	SLOWNESS	AZIMUTH
0.10	290.7	0.08	288.0	0.06	283.6	0.04	275.4	0.03	257.0	0.02	212.0	35.36	167.0	22.36	148.6	15.81	140.4	12.13	136.0	9.81	133.3	VELOCITY	AZIMUTH
9.81	290.7	12.13	288.0	15.81	283.6	22.36	275.4	35.36	257.0	50.00	212.0	999.99	167.0	84.99	148.6	57.60	140.4	25.86	136.0	19.89	133.3	DISTANCE	AZIMUTH
19.90	290.7	25.86	288.0	57.60	283.6	84.99	275.4	999.99	257.0	999.99	212.0	999.99	999.9	53.90S	138.8E	30.68S	116.1E	5.49S	95.1E	0.42S	91.8E	LATITUDE	LONGITUDE
19.80N	57.7E	20.07N	51.2E	18.65N	17.5E	6.48N	8.9W	999.99	999.9	999.99	999.9	WEST OF MACQUARIE ISLAND				WESTERN AUSTRALIA		SOUTHWEST OF SUMATRA		SOUTH INDIAN OCEAN			
EASTERN ARABIAN PENINSULA		EASTERN ARABIAN PENINSULA		CENTRAL AFRICA		NORTHWEST AFRICA																	

TABLE C1

GBA: PART 2

BMATBEAM 29/07/76 00.10.09 B40620 2 12

0.11	280.2	0.09	275.4	0.07	268.3	0.06	257.0	0.04	238.6	0.04	212.0	0.04	185.4	0.06	167.0	0.07	155.7	0.09	148.6	0.11	143.8	SLOWNESS	AZIMUTH
9.28	280.2	11.18	275.4	13.87	268.3	17.68	257.0	22.36	238.6	25.00	212.0	22.36	185.4	17.68	167.0	13.87	155.7	11.18	148.6	9.28	143.8	VELOCITY	AZIMUTH
18.58	280.2	23.03	275.4	44.13	268.3	68.63	257.0	84.99	238.6	999.99	212.0	84.99	185.4	68.63	167.0	44.13	155.7	23.03	148.6	18.58	143.8	DISTANCE	AZIMUTH
16.15N	58.4E	14.64N	53.7E	8.56N	32.7E	6.85S	11.4E	29.16S	1.1E	999.99	999.9	70.83S	60.8E	53.04S	97.7E	26.85S	96.1E	6.39S	89.3E	1.65S	88.3E	LATITUDE	LONGITUDE
ARABIAN SEA		ARABIAN SEA		SUDAN		SOUTH ATLANTIC OCEAN		SOUTH ATLANTIC OCEAN				ANTARCTICA		SOUTHEAST INDIAN RISE		SOUTH INDIAN OCEAN		SOUTH INDIAN OCEAN		SOUTH INDIAN OCEAN			

0.12	271.0	0.10	265.1	0.08	257.0	0.07	245.7	0.06	230.4	0.06	212.0	0.06	193.6	0.07	178.3	0.08	167.0	0.10	158.9	0.12	153.0	SLOWNESS	AZIMUTH
8.57	271.0	10.00	265.1	11.79	257.0	13.87	245.7	15.81	230.4	16.67	212.0	15.81	193.6	13.87	178.3	11.79	167.0	10.00	158.9	8.57	153.0	VELOCITY	AZIMUTH
15.92	271.0	20.36	265.1	24.60	257.0	44.13	245.7	57.60	230.4	62.96	212.0	57.60	193.6	44.13	178.3	24.60	167.0	20.36	158.9	15.92	153.0	DISTANCE	AZIMUTH
13.36N	61.1E	11.05N	56.8E	7.02N	53.3E	6.41S	37.8E	23.57S	32.3E	39.11S	40.1E	42.48S	61.9E	30.76S	78.8E	10.55S	82.9E	5.57S	84.7E	0.74S	84.6E	LATITUDE	LONGITUDE
ARABIAN SEA		SOCOTRA REGION		NORTH INDIAN OCEAN		TANZANIA		MOZAMBIQUE		SOUTH INDIAN OCEAN		SOUTH INDIAN OCEAN		MID-INDIAN RISE		SOUTH INDIAN OCEAN		SOUTH INDIAN OCEAN		SOUTH INDIAN OCEAN			

0.13	263.9	0.11	257.0	0.10	248.9	0.09	238.6	0.08	226.0	0.08	212.0	0.08	198.0	0.09	185.4	0.10	175.1	0.11	167.0	0.13	160.7	SLOWNESS	AZIMUTH
7.81	263.9	8.84	257.0	10.00	248.9	11.18	238.6	12.13	226.0	12.50	212.0	12.13	198.0	11.18	185.4	10.00	175.1	8.84	167.0	7.81	160.7	VELOCITY	AZIMUTH
-1.00	263.9	17.16	257.0	20.36	248.9	23.03	238.6	25.86	226.0	29.86	212.0	25.86	198.0	23.03	185.4	20.36	175.1	17.16	167.0	-1.00	160.7	DISTANCE	AZIMUTH
13.72N	78.5E	9.20N	60.5E	5.62N	58.4E	0.96N	57.9E	4.86S	59.1E	12.08S	61.8E	11.21S	69.6E	9.48S	75.3E	6.82S	79.1E	3.25S	81.2E	14.55N	77.1E	LATITUDE	LONGITUDE
INDIA		CARLSBERG RIDGE		CARLSBERG RIDGE		NORTH INDIAN OCEAN		SOUTH INDIAN OCEAN		SOUTH INDIAN OCEAN		MID-INDIAN RISE		CHAGOS ARCHIPELAGO REGION		SOUTH INDIAN OCEAN		SOUTH INDIAN OCEAN		INDIA			

0.14	257.0	0.13	250.7	0.12	243.0	0.11	233.8	0.10	223.3	0.10	212.0	0.10	200.7	0.11	190.2	0.12	181.0	0.13	173.3	0.14	167.0	SLOWNESS	AZIMUTH
7.07	257.0	7.81	250.7	8.57	243.0	9.28	233.8	9.81	223.3	10.00	212.0	9.81	200.7	9.28	190.2	8.57	181.0	7.81	173.3	7.07	167.0	VELOCITY	AZIMUTH
-1.00	257.0	-1.00	250.7	15.92	243.0	18.58	233.8	19.89	223.3	20.36	212.0	19.89	200.7	18.58	190.2	15.92	181.0	-1.00	173.3	-1.00	167.0	DISTANCE	AZIMUTH
13.83N	78.4E	13.94N	78.4E	5.98N	63.2E	2.22N	62.5E	1.21S	63.9E	3.91S	66.8E	5.19S	70.5E	4.82S	74.2E	2.42S	77.2E	14.60N	77.3E	14.58N	77.2E	LATITUDE	LONGITUDE
INDIA		INDIA		CARLSBERG RIDGE		CARLSBERG RIDGE		SOUTH INDIAN OCEAN		SOUTH INDIAN OCEAN		CHAGOS ARCHIPELAGO REGION		CHAGOS ARCHIPELAGO REGION		MALDIVE ISLANDS REGION		INDIA		INDIA			

TABLE C2

WRA: PART 1

```
BMATBEAM    29/07/76    00.10.09                                                  B40620   2 MATBEAM    29/07/76    00.10.09                                                  B40620   2   7

                                                                              WARRAMUNGA ARRAY     0.10   15.5        0.10   26.9        0.11   37.2        0.12   46.1        0.13   53.5     SLOWNESS   AZIMUTH
      0.15  323.5        0.14  328.9        0.13  335.6        0.11  343.6        0.11  353.2        0.10    4.0      9.99   15.5        9.71   26.9        9.12   37.2        8.38   46.1        7.60   53.5     VELOCITY   AZIMUTH
      6.49  323.5        7.18  328.9        7.94  335.6        8.71  343.6        9.41  353.2        9.88    4.0     20.33   15.5       19.66   26.9       18.12   37.2       14.65   46.1       -1.00   53.5     DISTANCE   AZIMUTH
     -1.00  323.5       -1.00  328.9       -1.00  335.6       16.64  343.6       18.90  353.2       20.07    4.0      0.17S 139.7E      2.13S 143.1E      5.15S 145.2E      9.45S 145.0E     20.54S 133.5E    LATITUDE   LONGITUDE
     20.75S 135.0E      20.81S 134.9E      20.86S 134.8E       3.84S 129.7E       1.05S 132.1E       0.20N 135.7E       WEST IRIAN               EAST PAPUA NEW GUINEA REGION            NORTHERN TERRITORY, AUSTRALIA
  NORTHERN TERRITORY, AUSTRALIA      NORTHERN TERRITORY, AUSTRALIA                         WEST IRIAN                                 PAPUA NEW GUINEA REGION                 CORAL SEA
                 NORTHERN TERRITORY, AUSTRALIA                     CERAM                                WEST IRIAN


                                                                                                         0.08   18.4        0.08   32.2        0.09   44.0        0.11   53.5        0.12   60.9     SLOWNESS   AZIMUTH
      0.14  318.1        0.12  323.5        0.11  330.5        0.10  339.4        0.09  350.6        0.08    4.0     12.44   18.4       11.81   32.2       10.71   44.0        9.51   53.5        8.38   60.9     VELOCITY   AZIMUTH
      7.18  318.1        8.12  323.5        9.21  330.5       10.41  339.4       11.56  350.6       12.35    4.0     27.93   18.4       24.67   32.2       21.96   44.0       19.15   53.5       14.65   60.9     DISTANCE   AZIMUTH
     -1.00  318.1        4.56  323.5       18.36  330.5       21.26  339.4       23.95  350.6       26.89    4.0      6.85N 142.9E      1.40N 147.2E      3.55S 149.4E      7.91S 149.8E     12.35S 147.4E    LATITUDE   LONGITUDE
     20.69S 135.1E      16.24S 131.5E       3.69S 125.4E       0.19N 127.0E       9.86N 130.6E       7.05N 136.2E   CAROLINE ISLANDS REGION                BISMARCK SEA                            CORAL SEA
  NORTHERN TERRITORY, AUSTRALIA                 CERAM SEA                      NORTH OF HALMAHERA                                  CAROLINE ISLANDS REGION              NEW BRITAIN REGION
                 NORTHERN TERRITORY, AUSTRALIA                     HALMAHERA                  WEST CAROLINE ISLANDS


                                                                                                         0.06   23.2        0.07   40.3        0.08   53.5        0.09   63.0        0.11   69.8     SLOWNESS   AZIMUTH
      0.13  311.4        0.11  316.5        0.09  323.5        0.08  333.2        0.07  346.6        0.06    4.0     16.41   23.2       14.81   40.3       12.67   53.5       10.71   63.0        9.12   69.8     VELOCITY   AZIMUTH
      7.94  311.4        9.21  316.5       10.82  323.5       12.80  333.2       14.93  346.6       16.46    4.0     61.28   23.2       50.99   40.3       32.42   53.5       21.96   63.0       18.12   69.8     DISTANCE   AZIMUTH
     -1.00  311.4       18.36  316.5       22.21  323.5       34.12  333.2       51.87  346.6       61.65    4.0     36.74N 159.8E     20.24N 166.7E      0.79N 159.9E      8.96S 154.1E     12.87S 151.8E    LATITUDE   LONGITUDE
     20.61S 135.2E       6.17S 121.8E       1.62S 121.4E      11.04N 119.4E      30.87N 122.1E      41.86N 139.1E     NORTH PACIFIC OCEAN          CAROLINE ISLANDS REGION          DENTRECASTEAUX ISLANDS REGION
  NORTHERN TERRITORY, AUSTRALIA               SULAWESI                         EASTERN CHINA                                       NORTH PACIFIC OCEAN       DENTRECASTEAUX ISLANDS REGION
                         FLORES SEA                     PALAWAN, PHILIPPINE ISLANDS        HOKKAIDO, JAPAN, REGION


                                                                                                         0.04   32.2        0.05   53.5        0.07   66.7        0.08   74.8        0.10   80.1     SLOWNESS   AZIMUTH
      0.11  303.4        0.10  307.6        0.08  313.8        0.06  323.5        0.05  339.4        0.04    4.0     23.61   32.2       19.01   53.5       14.81   66.7       11.81   74.8        9.71   80.1     VELOCITY   AZIMUTH
      8.71  303.4       10.41  307.6       12.80  313.8       16.24  323.5       20.82  339.4       24.69    4.0     89.65   32.2       74.14   53.5       50.99   66.7       24.67   74.8       19.66   80.1     DISTANCE   AZIMUTH
     16.64  303.4       21.26  307.6       34.12  313.8       60.18  323.5       80.82  339.4      999.99    4.0     52.76N 164.4W     26.62N 165.9W      4.38N 180.0W     11.93S 158.7E     15.48S 154.5E    LATITUDE   LONGITUDE
     10.24S 120.3E       6.23S 117.6E       4.88N 110.4E      29.34N  98.1E      54.79N  97.5E     999.99  999.9      SOUTH OF ALASKA                    NORTH PACIFIC OCEAN                        CORAL SEA
    SUMBA ISLAND REGION                SOUTH CHINA SEA                          CENTRAL USSR                               HAWAIIAN ISLANDS REGION              SOLOMON ISLANDS REGION
                          BALI SEA                          TIBET


                                                                                                         0.03   53.5        0.04   74.8        0.06   83.8        0.08   88.6        0.10   91.5     SLOWNESS   AZIMUTH
      0.11  293.8        0.09  296.4        0.07  300.4        0.05  307.6        0.03  323.5        0.02    4.0     38.02   53.5       23.61   74.8       16.41   83.8       12.44   88.6        9.99   91.5     VELOCITY   AZIMUTH
      9.41  293.8       11.56  296.4       14.93  300.4       20.82  307.6       32.47  323.5       49.38    4.0    999.99   53.5       89.65   74.8       61.28   83.8       27.93   88.6       20.33   91.5     DISTANCE   AZIMUTH
     18.90  293.8       23.95  296.4       51.87  300.4       80.82  307.6      999.99  323.5      999.99    4.0    999.99  999.9       14.23N 141.2W      4.30S 164.7W     16 89S 163.6E     19.17S 155.9E    LATITUDE   LONGITUDE
     11.47S 116.8E       8.12S 112.8E       9.55N  90.9E      31.01N  68.7E     999.99  999.9      999.99  999.9                                   LINE ISLANDS REGION                 EAST OF AUSTRALIA
    SOUTH OF SUMBAWA ISLAND         NICOBAR ISLANDS REGION                                                                        NORTH PACIFIC OCEAN         NEW HEBRIDES ISLANDS REGION
                         JAVA                              PAKISTAN


                                                                                                         0.02  103.0        0.04  103.0        0.06  103.0        0.08  103.0        0.10  103.0     SLOWNESS   AZIMUTH
      0.10  283.0        0.08  283.0        0.06  283.0        0.04  283.0        0.02  283.0        0.0     0.0     50.00  103.0       25.00  103.0       16.67  103.0       12.50  103.0       10.00  103.0     VELOCITY   AZIMUTH
     10.00  283.0       12.50  283.0       16.67  283.0       25.00  283.0       50.00  283.0      999.99    0.0    999.99  103.0      999.99  103.0       62.96  103.0       29.86  103.0       20.36  103.0     DISTANCE   AZIMUTH
     20.36  283.0       29.86  283.0       62.96  283.0      999.99  283.0      999.99  283.0      999.99    0.0    999.99  999.9      999.99  999.9       20.17S 158.2W     23.69S 166.3E     23.19S 156.0E    LATITUDE   LONGITUDE
     14.23S 113.9E      10.95S 104.7E       1.98N  74.1E     999.99  999.9      999.99  999.9      999.99  999.9                                   COOK ISLANDS REGION                 EAST OF AUSTRALIA
    NORTHWEST OF AUSTRALIA          MALDIVE ISLANDS REGION                                                                                                  NEW CALEDONIA
                    SOUTHWEST OF SUMATRA


                                                                                                         0.03  143.5        0.05  127.6        0.07  120.4        0.09  116.4        0.11  113.8     SLOWNESS   AZIMUTH
      0.10  271.5        0.08  268.6        0.06  263.8        0.04  254.8        0.03  233.5        0.02  184.0     32.47  143.5       20.82  127.6       14.93  120.4       11.56  116.4        9.41  113.8     VELOCITY   AZIMUTH
      9.99  271.5       12.44  268.6       16.41  263.8       23.61  254.8       38.02  233.5       49.38  184.0    999.99  143.5       80.82  127.6       51.87  120.4       23.95  116.4       18.90  113.8     DISTANCE   AZIMUTH
     20.33  271.5       27.94  268.6       61.28  263.8       89.65  254.8      999.99  233.5      999.99  184.0    999.99  999.9       38.57S 131.7W     35.89S 169.0W     28.82S 158.8E     26.52S 153.7E    LATITUDE   LONGITUDE
     18.15S 112.9E      18.20S 104.8E      14.66S  70.1E      14.48S  39.4E     999.99  999.9      999.99  999.9                                   SOUTH PACIFIC OCEAN              NEAR EAST COAST OF AUSTRALIA
    NORTHWEST OF AUSTRALIA            SOUTH INDIAN OCEAN                                                                          SOUTH PACIFIC OCEAN              EAST OF AUSTRALIA
                    SOUTH INDIAN OCEAN                      MOZAMBIQUE
```

TABLE C2

WRA: PART 2

0.10 260.1	0.08 254.8	0.07 246.7	0.05 233.5	0.04 212.2	0.04 184.0	
9.71 260.1	11.81 254.8	14.81 246.7	19.01 233.5	23.61 212.2	24.69 184.0	
19.66 260.1	24.67 254.8	50.99 246.7	74.14 233.5	89.65 212.2	999.99 184.0	
22.07S 119.4E	24.41S 108.1E	30.36S 78.7E	39.31S 49.0E	53.15S 16.5E	999.99 999.9	
WESTERN AUSTRALIA		MID-INDIAN RISE		SOUTHWEST OF AFRICA		
	WEST OF AUSTRALIA		ATLANTIC-INDIAN RISE			

0.11 249.8	0.09 243.0	0.08 233.5	0.07 220.3	0.06 203.2	0.06 184.0	
9.12 249.8	10.71 243.0	12.67 233.5	14.81 220.3	16.41 203.2	16.46 184.0	
18.12 249.8	21.96 243.0	32.42 233.5	50.99 220.3	61.28 203.2	61.65 184.0	
25.19S 115.6E	28.47S 112.1E	36.08S 102.2E	50.62S 82.2E	67.29S 71.7E	80.78S 112.0E	
WESTERN AUSTRALIA		SOUTH INDIAN OCEAN		KERGUELEN-GAUSSBERG RISE		
	WEST OF AUSTRALIA		SOUTH INDIAN OCEAN		ANTARCTICA	

0.12 240.9	0.11 233.5	0.09 224.0	0.08 212.2	0.08 198.4	0.08 184.0	
8.38 240.9	9.51 233.5	10.71 224.0	11.81 212.2	12.44 198.4	12.35 184.0	
14.65 240.9	19.15 233.5	21.96 224.0	24.67 212.2	27.93 198.4	26.89 184.0	
26.50S 120.1E	30.43S 116.6E	34.76S 116.0E	40.02S 117.5E	46.06S 122.1E	46.82S 131.7E	
WESTERN AUSTRALIA		WESTERN AUSTRALIA		SOUTH OF AUSTRALIA		
	WESTERN AUSTRALIA		SOUTH OF AUSTRALIA		SOUTH OF AUSTRALIA	

0.13 233.5	0.12 226.1	0.11 217.2	0.10 206.9	0.10 195.5	0.10 184.0	
7.60 233.5	8.38 226.1	9.12 217.2	9.71 206.9	9.99 195.5	9.88 184.0	
-1.00 233.5	14.65 226.1	18.12 217.2	19.66 206.9	20.33 195.5	20.07 184.0	
19.35S 135.2E	29.71S 122.3E	33.92S 121.3E	37.18S 123.4E	39.46S 127.5E	40.02S 132.6E	
NORTHERN TERRITORY, AUSTRALIA		WESTERN AUSTRALIA		OFF SOUTH COAST OF AUSTRALIA		
	WESTERN AUSTRALIA		OFF SOUTH COAST OF AUSTRALIA		SOUTH OF AUSTRALIA	

0.05 159.4	0.06 143.5	0.08 133.8	0.10 127.6	0.11 123.4	SLOWNESS	AZIMUTH
20.82 159.4	16.24 143.5	12.80 133.8	10.41 127.6	8.71 123.4	VELOCITY	AZIMUTH
80.82 159.4	60.18 143.5	34.12 133.8	21.26 127.6	16.64 123.4	DISTANCE	AZIMUTH
67.56S 110.5W	55.74S 159.8W	40.44S 166.4E	31.79S 154.1E	28.41S 150.1E	LATITUDE	LONGITUDE
SOUTHERN PACIFIC OCEAN		OFF W. COAST OF S. ISLAND, N. Z.		QUEENSLAND, AUSTRALIA		
	SOUTH PACIFIC OCEAN		NEAR EAST COAST OF AUSTRALIA			

0.07 166.6	0.08 153.2	0.09 143.5	0.11 136.5	0.13 131.4	SLOWNESS	AZIMUTH
14.93 166.6	12.80 153.2	10.82 143.5	9.21 136.5	7.94 131.4	VELOCITY	AZIMUTH
51.87 166.6	34.12 153.2	22.21 143.5	18.36 136.5	-1.00 131.4	DISTANCE	AZIMUTH
68.46S 163.9E	48.93S 156.9E	37.04S 150.7E	32.66S 149.2E	19.28S 133.6E	LATITUDE	LONGITUDE
BALLENY ISLANDS REGION		NEAR S.E. COAST OF AUSTRALIA		NORTHERN TERRITORY, AUSTRALIA		
	NORTH OF MACQUARIE ISLAND		NEW SOUTH WALES, AUSTRALIA			

0.09 170.6	0.10 159.4	0.11 150.5	0.12 143.5	0.14 138.1	SLOWNESS	AZIMUTH
11.56 170.6	10.41 159.4	9.21 150.5	8.12 143.5	7.18 138.1	VELOCITY	AZIMUTH
23.85 170.6	21.26 159.4	18.36 150.5	4.56 143.5	-1.00 138.1	DISTANCE	AZIMUTH
43.56S 139.6E	39.64S 143.9E	35.61S 145.3E	23.60S 137.3E	19.20S 133.6E	LATITUDE	LONGITUDE
SOUTH OF AUSTRALIA		NEW SOUTH WALES, AUSTRALIA		NORTHERN TERRITORY, AUSTRALIA		
	BASS STRAIT		NORTHERN TERRITORY, AUSTRALIA			

0.11 173.2	0.11 163.6	0.13 155.6	0.14 148.9	0.15 143.5	SLOWNESS	AZIMUTH
9.41 173.2	8.71 163.6	7.94 155.6	7.18 148.9	6.49 143.5	VELOCITY	AZIMUTH
18.90 173.2	16.64 163.6	-1.00 155.6	-1.00 148.9	-1.00 143.5	DISTANCE	AZIMUTH
38.76S 137.2E	35.87S 140.1E	19.03S 133.9E	19.09S 133.8E	19.14S 133.7E	LATITUDE	LONGITUDE
OFF SOUTH COAST OF AUSTRALIA		NORTHERN TERRITORY, AUSTRALIA		NORTHERN TERRITORY, AUSTRALIA		
	NEAR SOUTH COAST OF AUSTRALIA		NORTHERN TERRITORY, AUSTRALIA			

TABLE C3

YKA: PART 1

BMATBEAM 29/07/76 00.10.09 B40620 2 MATBEAM 29/07/76 00.10.09 B40620 2 3

YELLOWKNIFE ARRAY

0.14	315.0	0.13	321.3	0.12	329.0	0.11	338.2	0.10	348.7	0.10	360.0	0.10	11.3	0.11	21.8	0.12	31.0	0.13	38.7	0.14	45.0	SLOWNESS	AZIMUTH
7.07	315.0	7.81	321.3	8.57	329.0	9.28	338.2	9.81	348.7	10.00	360.0	9.81	11.3	9.28	21.8	8.57	31.0	7.81	38.7	7.07	45.0	VELOCITY	AZIMUTH
-1.00	315.0	-1.00	321.3	15.92	329.0	18.58	338.2	19.89	348.7	20.36	360.0	19.89	11.3	18.58	21.8	15.92	31.0	-1.00	38.7	-1.00	45.0	DISTANCE	AZIMUTH
61.78N	113.1W	61.71N	113.3W	74.03N	145.3W	77.79N	148.2W	81.08N	139.9W	82.74N	114.6W	81.08N	89.3W	77.79N	81.0W	74.03N	84.0W	61.71N	115.9W	61.78N	116.1W	LATITUDE	LONGITUDE
NORTHWEST TERRITORIES, CANADA				BEAUFORT SEA				ARCTIC OCEAN				QUEEN ELIZABETH ISLANDS				QUEEN ELIZABETH ISLANDS				NORTHWEST TERRITORIES, CANADA			
NORTHWEST TERRITORIES, CANADA						ARCTIC OCEAN				ARCTIC OCEAN		QUEEN ELIZABETH ISLANDS				NORTHWEST TERRITORIES, CANADA							

0.13	308.7	0.11	315.0	0.10	323.1	0.09	333.4	0.08	346.0	0.08	360.0	0.08	14.0	0.09	26.6	0.10	36.9	0.11	45.0	0.13	51.3	SLOWNESS	AZIMUTH
7.81	308.7	8.84	315.0	10.00	323.1	11.18	333.4	12.13	346.0	12.50	360.0	12.13	14.0	11.18	26.6	10.00	36.9	8.84	45.0	7.81	51.3	VELOCITY	AZIMUTH
-1.00	308.7	17.16	315.0	20.36	323.1	23.03	333.4	25.86	346.0	29.86	360.0	25.86	14.0	23.03	26.6	20.36	36.9	17.16	45.0	-1.00	51.3	DISTANCE	AZIMUTH
61.86N	113.0W	70.70N	153.5W	73.76N	162.5W	77.92N	170.8W	83.49N	177.5E	87.82N	65.4E	83.49N	46.7W	77.92N	58.5W	73.76N	66.8W	70.70N	75.7W	61.86N	116.3W	LATITUDE	LONGITUDE
NORTHWEST TERRITORIES, CANADA				BEAUFORT SEA				ARCTIC OCEAN				NEAR NORTH COAST OF GREENLAND				BAFFIN BAY				NORTHWEST TERRITORIES, CANADA			
		ALASKA				ARCTIC OCEAN				NORTH OF FRANZ JOSEF LAND				WESTERN GREENLAND				BAFFIN ISLAND REGION					

0.12	301.0	0.10	306.9	0.08	315.0	0.07	326.3	0.06	341.6	0.06	360.0	0.06	18.4	0.07	33.7	0.08	45.0	0.10	53.1	0.12	59.0	SLOWNESS	AZIMUTH
8.57	301.0	10.00	306.9	11.79	315.0	13.87	326.3	15.81	341.6	16.67	360.0	15.81	18.4	13.87	33.7	11.79	45.0	10.00	53.1	8.57	59.0	VELOCITY	AZIMUTH
15.92	301.0	20.36	306.9	24.60	315.0	49.13	326.3	57.60	341.6	62.96	360.0	57.60	18.4	44.13	33.7	24.60	45.0	20.36	53.1	15.92	59.0	DISTANCE	AZIMUTH
66.66N	150.8W	68.15N	162.6W	70.51N	175.8W	64.94N	130.4E	58.01N	95.5E	54.89N	65.4E	58.01N	35.3E	64.94N	0.4E	70.51N	53.4W	68.15N	66.6W	66.67N	78.4W	LATITUDE	LONGITUDE
ALASKA				CHUKCHI SEA				CENTRAL USSR				EUROPEAN USSR				WESTERN GREENLAND				NORTHWEST TERRITORIES, CANADA			
		ALASKA				EASTERN SIBERIA				CENTRAL KAZAKH SSR				NORWEGIAN SEA				BAFFIN ISLAND REGION					

0.11	291.8	0.09	296.6	0.07	303.7	0.06	315.0	0.04	333.4	0.04	360.0	0.04	26.6	0.06	45.0	0.07	56.3	0.09	63.4	0.11	68.2	SLOWNESS	AZIMUTH
9.28	291.8	11.18	296.6	13.87	303.7	17.68	315.0	22.36	333.4	25.00	360.0	22.36	26.6	17.68	45.0	13.87	56.3	11.18	63.4	9.28	68.2	VELOCITY	AZIMUTH
18.58	291.8	23.03	296.6	44.13	303.7	68.63	315.0	84.99	333.4	999.99	360.0	84.99	26.6	68.63	45.0	44.13	56.3	23.03	63.4	18.58	68.2	DISTANCE	AZIMUTH
63.59N	156.0W	63.83N	166.7W	54.78N	154.5E	39.13N	123.2E	29.58N	96.2E	999.99	999.9	29.58N	34.6E	39.13N	7.6E	54.78N	23.7W	63.83N	62.5W	63.59N	79.2W	LATITUDE	LONGITUDE
CENTRAL ALASKA				SEA OF OKHOTSK				INDIA-CHINA BORDER REGION				UNITED ARAB REPUBLIC				NORTH ATLANTIC OCEAN				HUDSON STRAIT REGION			
		BERING STRAIT				NORTHEASTERN CHINA						WESTERN MEDITERRANEAN SEA						DAVIS STRAIT					

0.10	281.3	0.08	284.0	0.06	288.4	0.04	296.6	0.03	315.0	0.02	0.0	0.03	45.0	0.04	63.4	0.06	71.6	0.08	76.0	0.10	78.7	SLOWNESS	AZIMUTH
9.81	281.3	12.13	284.0	15.81	288.4	22.36	296.6	35.36	315.0	50.00	0.0	35.36	45.0	22.36	63.4	15.81	71.6	12.13	76.0	9.81	78.7	VELOCITY	AZIMUTH
19.90	281.3	25.86	284.0	57.60	288.4	84.99	296.6	999.99	315.0	999.99	0.0	999.99	45.0	84.99	63.4	57.60	71.6	25.86	76.0	19.90	78.7	DISTANCE	AZIMUTH
59.91N	156.1W	57.96N	167.2W	36.96N	156.3E	16.62N	133.7E	999.99	999.9	999.99	999.9	999.99	999.9	16.62N	2.9W	36.96N	25.5W	57.96N	62.1W	59.91N	79.1W	LATITUDE	LONGITUDE
SOUTHERN ALASKA				NORTH PACIFIC OCEAN												AZORES ISLANDS				NORTHERN QUEBEC			
		PRIBILOF ISLANDS				PHILIPPINE SEA								NORTHWEST AFRICA				LABRADOR					

0.10	270.0	0.08	270.0	0.06	270.0	0.04	270.0	0.02	270.0	0.0	0.0	0.02	90.0	0.04	90.0	0.06	90.0	0.08	90.0	0.10	90.0	SLOWNESS	AZIMUTH
10.00	270.0	12.50	270.0	16.67	270.0	25.00	270.0	50.00	270.0	999.99	0.0	50.00	90.0	25.00	90.0	16.67	90.0	12.50	90.0	10.00	90.0	VELOCITY	AZIMUTH
20.36	270.0	29.86	270.0	62.96	270.0	999.99	270.0	999.99	270.0	999.99	0.0	999.99	90.0	999.99	90.0	62.96	90.0	29.86	90.0	20.36	90.0	DISTANCE	AZIMUTH
56.32N	153.2W	50.37N	165.6W	23.89N	168.7E	999.99	999.9	999.99	999.9	999.99	999.9	999.99	999.9	999.99	999.9	23.89N	37.9W	50.37N	63.6W	56.32N	76.0W	LATITUDE	LONGITUDE
KODIAK ISLAND REGION				NORTH PACIFIC OCEAN												NORTH ATLANTIC OCEAN				NORTHERN QUEBEC			
		ALEUTIAN ISLANDS REGION																EASTERN QUEBEC					

0.10	258.7	0.08	256.0	0.06	251.6	0.04	243.4	0.03	225.0	0.02	180.0	0.03	135.0	0.04	116.6	0.06	108.4	0.08	104.0	0.10	101.3	SLOWNESS	AZIMUTH
9.81	258.7	12.13	256.0	15.81	251.6	22.36	243.4	35.36	225.0	50.00	180.0	35.36	135.0	22.36	116.6	15.81	108.4	12.13	104.0	9.81	101.3	VELOCITY	AZIMUTH
19.90	258.7	25.86	256.0	57.60	251.6	84.99	243.4	999.99	225.0	999.99	180.0	999.99	135.0	84.99	116.6	57.60	108.4	25.86	104.0	19.89	101.3	DISTANCE	AZIMUTH
53.49N	148.6W	48.60N	154.2W	20.65N	173.4W	7.49S	178.6W	999.99	999.9	999.99	999.9	999.99	999.9	7.49S	50.6W	20.66N	55.8W	48.60N	75.0W	53.49N	80.7W	LATITUDE	LONGITUDE
SOUTH OF ALASKA				HAWAIIAN ISLANDS REGION												NORTH ATLANTIC OCEAN				NORTHERN QUEBEC			
		SOUTH OF ALASKA				ELLICE ISLANDS REGION								BRAZIL				SOUTHERN QUEBEC					

TABLE C3

YKA: PART 2

BMATBEAM 29/07/76 00.10.09 B40620 2 2MATBEAM 29/07/76 00.10.09 B40620 2 4

0.11	248.2	0.09	243.4	0.07	236.3	0.06	225.0	0.04	206.6	0.04	180.0	0.04	153.4	0.06	135.0	0.07	123.7	0.09	116.6	0.11	111.8	SLOWNESS	AZIMUTH
9.28	248.2	11.18	243.4	13.87	236.3	17.68	225.0	22.36	206.6	25.00	180.0	22.36	153.4	17.68	135.0	13.87	123.7	11.18	116.6	9.28	111.8	VELOCITY	AZIMUTH
18.58	248.2	23.03	243.4	44.13	236.3	68.63	225.0	84.99	206.6	999.99	180.0	84.99	153.4	68.63	135.0	44.13	123.7	23.03	116.6	18.58	111.8	DISTANCE	AZIMUTH
51.87N	143.1W	47.40N	145.6W	27.31N	155.2W	0.98N	155.8W	19.78S	142.8W	999.99	999.9	19.78S	86.4W	0.98N	73.4W	27.31N	74.0W	47.40N	83.6W	51.87N	86.1W	LATITUDE	LONGITUDE
SOUTH OF ALASKA				NORTH PACIFIC OCEAN				TUAMOTU ARCHIPELAGO REGION				SOUTHEAST CENTRAL PACIFIC OCEAN				OFF EAST COAST OF UNITED STATES				ONTARIO			
		SOUTH OF ALASKA				LINE ISLANDS REGION								COLOMBIA				ONTARIO					

0.12	239.0	0.10	233.1	0.08	225.0	0.07	213.7	0.06	198.4	0.06	180.0	0.06	161.6	0.07	146.3	0.08	135.0	0.10	126.9	0.12	121.0	SLOWNESS	AZIMUTH
8.57	239.0	10.00	233.1	11.79	225.0	13.87	213.7	15.81	198.4	16.67	180.0	15.81	161.6	13.87	146.3	11.79	135.0	10.00	126.9	8.57	121.0	VELOCITY	AZIMUTH
15.92	239.0	20.36	233.1	24.60	225.0	44.13	213.7	57.60	198.4	62.96	180.0	57.60	161.6	44.13	146.3	24.60	135.0	20.36	126.9	15.92	121.0	DISTANCE	AZIMUTH
52.02N	137.0W	47.37N	138.8W	42.16N	137.9W	21.65N	139.1W	5.93N	130.2W	0.63S	114.6W	5.93N	99.0W	21.65N	90.1W	42.16N	91.3W	47.37N	90.4W	52.02N	92.2W	LATITUDE	LONGITUDE
WEST OF VANCOUVER ISLAND				NORTH PACIFIC OCEAN				NORTH PACIFIC OCEAN				EAST CENTRAL PACIFIC OCEAN				IOWA				ONTARIO			
		WEST OF VANCOUVER ISLAND				NORTH PACIFIC OCEAN				EAST CENTRAL PACIFIC OCEAN				YUCUTAN PENINSULA				MINNESOTA					

0.13	231.3	0.11	225.0	0.10	216.9	0.09	206.6	0.08	194.0	0.08	180.0	0.08	166.0	0.09	153.4	0.10	143.1	0.11	135.0	0.13	128.7	SLOWNESS	AZIMUTH
7.81	231.3	8.84	225.0	10.00	216.9	11.18	206.6	12.13	194.0	12.50	180.0	12.13	166.0	11.18	153.4	10.00	143.1	8.84	135.0	7.81	128.7	VELOCITY	AZIMUTH
-1.00	231.3	17.16	225.0	20.36	216.9	23.03	206.6	25.86	194.0	29.86	180.0	25.86	166.0	23.03	153.4	20.36	143.1	17.16	135.0	-1.00	128.7	DISTANCE	AZIMUTH
63.10N	112.9W	48.73N	139.0W	44.71N	131.6W	40.93N	128.0W	37.09N	122.2W	32.65N	114.6W	37.09N	107.0W	40.93N	101.3W	44.71N	97.6W	48.73N	96.2W	63.10N	116.3W	LATITUDE	LONGITUDE
NORTHWEST TERRITORIES, CANADA				OFF COAST OF OREGON				CENTRAL CALIFORNIA				COLORADO				SOUTH DAKOTA				NORTHWEST TERRITORIES, CANADA			
		WEST OF VANCOUVER ISLAND				OFF COAST OF NORTHERN CALIFORNIA				W. ARIZONA-MEXICO BORDER REGION				NEBRASKA				MINNESOTA					

0.14	225.0	0.13	218.7	0.12	211.0	0.11	201.8	0.10	191.3	0.10	180.0	0.10	168.7	0.11	158.2	0.12	149.0	0.13	141.3	0.14	135.0	SLOWNESS	AZIMUTH
7.07	225.0	7.81	218.7	8.57	211.0	9.28	201.8	9.81	191.3	10.00	180.0	9.81	168.7	9.28	158.2	8.57	149.0	7.81	141.3	7.07	135.0	VELOCITY	AZIMUTH
-1.00	225.0	-1.00	218.7	15.92	211.0	18.58	201.8	19.89	191.3	20.36	180.0	19.89	168.7	18.58	158.2	15.92	149.0	-1.00	141.3	-1.00	135.0	DISTANCE	AZIMUTH
63.19N	113.0W	63.26N	113.2W	48.13N	126.8W	44.79N	124.2W	42.87N	119.8W	42.17N	114.6W	42.87N	109.4W	44.79N	105.0W	48.13N	102.4W	63.26N	116.0W	63.19N	116.2W	LATITUDE	LONGITUDE
NORTHWEST TERRITORIES, CANADA				VANCOUVER ISLAND REGION				OREGON				WYOMING				NORTH DAKOTA				NORTHWEST TERRITORIES, CANADA			
		NORTHWEST TERRITORIES, CANADA				NEAR COAST OF OREGON				WESTERN IDAHO				WYOMING				NORTHWEST TERRITORIES, CANADA					

DOCUMENT CONTROL SHEET

Overall security classification of sheet ....Unclassified....

(As far as possible this sheet should contain only unclassified information. If it is necessary to enter classified information, the box concerned must be marked to indicate the classification eg (R), (C) or (S)).

1. DRIC Reference (if known)	2. Originator's Reference	3. Agency Reference	4. Report Security Classification
-	AWRE Report 036/76	-	On Sale

5. Originator's Code (if known)	6. Originator (Corporate Author) Name and Location
-	Atomic Weapons Research Establishment, Aldermaston, Berkshire
5a. Sponsoring Agency's Code (if known)	**6a. Sponsoring Agency (Contract Authority) Name and Location**
-	-

7. Title

Seismic Array Station Processors

7a. Title in Foreign Language (in the case of Translation)

-

7b. Presented at (for Conference Papers). Title, Place and Date of Conference

-

8. Author 1.Surname, Initials	9a. Author 2	9b. Authors 3, 4	10. Date	pp	ref
Key F A	Lea T G	Douglas A	January 1977	50	9

11. Contract Number	12. Period	13. Project	14. Other References
-	-	-	-

15. Distribution Statement

No restrictions

16. Descriptors (or Keywords) (TEST)

Seismology
Seismic arrays
Seismic detection
Seismological stations
Nuclear explosion detection

Abstract

A description is given of the design, construction and initial testing of two types of Seismometer Array Station Processor (SASP), one to work with data. stored on magnetic tape in analogue form, the other with data in digital form. The purpose of a SASP is to detect the short period P waves recorded by a UK-type array of 20 seismometers and to edit these on to a digital library tape or disc. The edited data are then processed to obtain a rough location for the source and to produce seismograms (after optimum processing) for analysis by a seismologist. SASP is an important component in the scheme for monitoring underground explosions advocated by the UK in the Conference of the Committee on Disarmament.